EFFECTIVE FROM
01-04-2021

Jayna®

The Kitchen Essentials

KITCHEN SINKS • FLOOR DRAINS • SHOWER CHANNELS • FAUCETS

INTELLIGENT DESIGN IDEAS THAT LASTS FOREVER

www.jaynasinks.com

Make in India

Headquartered in New Delhi, India the company takes great pride in its ability to deliver a magnificent product range with elegant designs and versatile functionalities.

Our History & Product Quality

Tap Mixer Hole

The well placed Tap Mixer Hole (in select models of sinks can be provided on demand)

Plumbing Connectors

FREE Plumbing Connectors are provided along with select models / sizes of JAYNA sinks for effective single water outlet for both the bowls. Exclusive plumbing connector is provided with sink model SBMB-08 and SBMB-09.

Installation Type

JAYNA sinks are available in three different installation types:

1) Sit-on(SO)

2) Flat(FB)

3) In-set(FBC)

In-set (FBC) with clamp In-set type sink will cost ₹ 400/- extra

JAYNA - A Perfect Lifestyle Statement

Jain Brothers Sanitation Pvt. Ltd. is one of the renowned makers of Stainless Steel Sinks in India. Since 1992, it has continuously redefined the market with products that bear the distinct hallmarks of superior quality, thoughtful functionality and above all, world-class design. JAYNA pioneered the use of premium quality stainless steel for kitchen sinks in the country and has time & again introduced products that set benchmarks. In fact, the credit for Jayna's huge success in the Indian market goes to the indomitable spirit that constantly strives to win customers' hearts through products that offer more in terms of form, function and value.

ISO 9001:2008 (QMS) Certified
ISO 14001:2004 (EMS) Certified

IS-13983
CM/L 8543987
ON SELECT MODELS

Always look for
JAYNA
authentic hologram on each sink

Our Infrastructure

At Jayna, we have state of the art production facilities which not only promises high quality standards but provide prompt and timely deliveries as well.The Infrastructure has been planned with minutest details to adhere to the benchmarks and provide a consistent product.

Today as world sprints ahead, there is growth in multiple sectors each requiring infrastructure development to sustain the growth. This holds true for the housing sector as well. JBSPL is committed to play a significant role in this regard.

The company has developed a variety of products so as to cater to different needs of its consumers. JBSPL leads the way with products that are trendsetters and lifestyle definers in the ever changing social-economic scenario by introducing ranges such as Noble, Regal, Magnum, King etc.

OUR VISION IS TO DELIVER BEST PRODUCT SOLUTIONS

Unique features of JAYNA Stainless Steel Kitchen Sinks:

Material

JAYNA Kitchen Sinks are made from 100% non-magnetic, corrosion-free high-grade stainless steel conforming to AISI-304 (18/8) grade.

Sizes & Design

JAYNA has one of the most extensive ranges of premium quality sinks available in 145 models/designs in over 215 different sizes to choose from.

Certifications

The Company has been authorized by the Bureau of Indian Standards (BIS) to use quality mark ISI (CML No.8543987) on a select range of sinks.

Plastic Coating

JAYNA sinks are provided with a special plastic coating which protects the sink from scratches and wear & tear, during installation.

Coupling

JAYNA sinks have specially designed 4"coupling/strainer made from high-grade stainless steel.

Undercoating

JAYNA sinks come with undercoating (on demand) which absorbs sound and protects against condensation.

Sound Deadening PAD (SDP)

The special Sound Deadening Pads (rubber pads) are glued under the sinks to reduce noise.

Finishes

JAYNA sinks are available in six different finishes:

1. Glossy finish
2. Matt finish
3. Anti-scratch (Linen finish)
4. Dual finish (Anti-scratch top and Matt finish bowl)
5. Brush finish (Square Sink range)
6. Satin Finish

Jayna®

The Kitchen Essentials

WE ARE COMMITED TO MAINTAIN OUR QUALITY

AISI 304 18/8 STEEL | RUST PEOOF | LIFETIME WARRANTY | GLOSS · MATT FINISHES ANTI-SCRATCH | 100% Non-Magnetic | 145×215 Models Sizes

INDEX

Quartz Collection Elleci 6 - 7
Mixer Collection 8-9
Quartz Collection Jio 10-11
Signature Collection 12-23
- Spartan / Oracle 12-13
- Galaxy 14-15
- Jupiter 16-17
- Apollo 18
- Mercury / Mars/ Venus 19
- Zodiac / Symphony 20
- Jubilee 21
- Crown / Atlas 22
- Pluto / Neptune 23

Sanitary Essentials 24-25
Accessories 26
Pelican 27-29
Collection International 30-55
- Combo 30-33
- Noble Square Series 34-37
- Regal Series 38-39
- Square Series 40-43
- Square R-10 Series 44-45
- Designo Series 46-48
- Aura 49
- Accessories 50-51
- Kitchen Faucets Single Lever - Chrome Finish 52-53
- 304 Stainless Steel Faucets 54-55

Smart Series Linear Shower Channel 56-65
Shower Channels 66-69
Floor Drain 70-79
- King / Regular/ Classic 71
- Regular / Flora/ Neon 72
- Elegant / Premium/ Aspire/ Magic 73
- Garnet / Lotus/ Wonder 74
- Rain Roof Drainer / Clean Out/ Clean Out Big/ Gratings 75
- Gratings 76
- Gratings / Topaz 77
- Gratings/ Topaz Gold/ Indus King/ New Heavy Gratings 78
- Opal / Opal Gold 79
- Manhole Cover 80-81
- Hydro/ RainWater Drainage Cover 82
- Access Cover / Box Channel / PVC Accessories 83

Bath Accessories 84-85
- Health Faucets / Jet Spray/ Flanges 84
- Hoses / Extension Nipples 85

Assembling Order of Shower Channel 87

QUARTZ COLLECTION

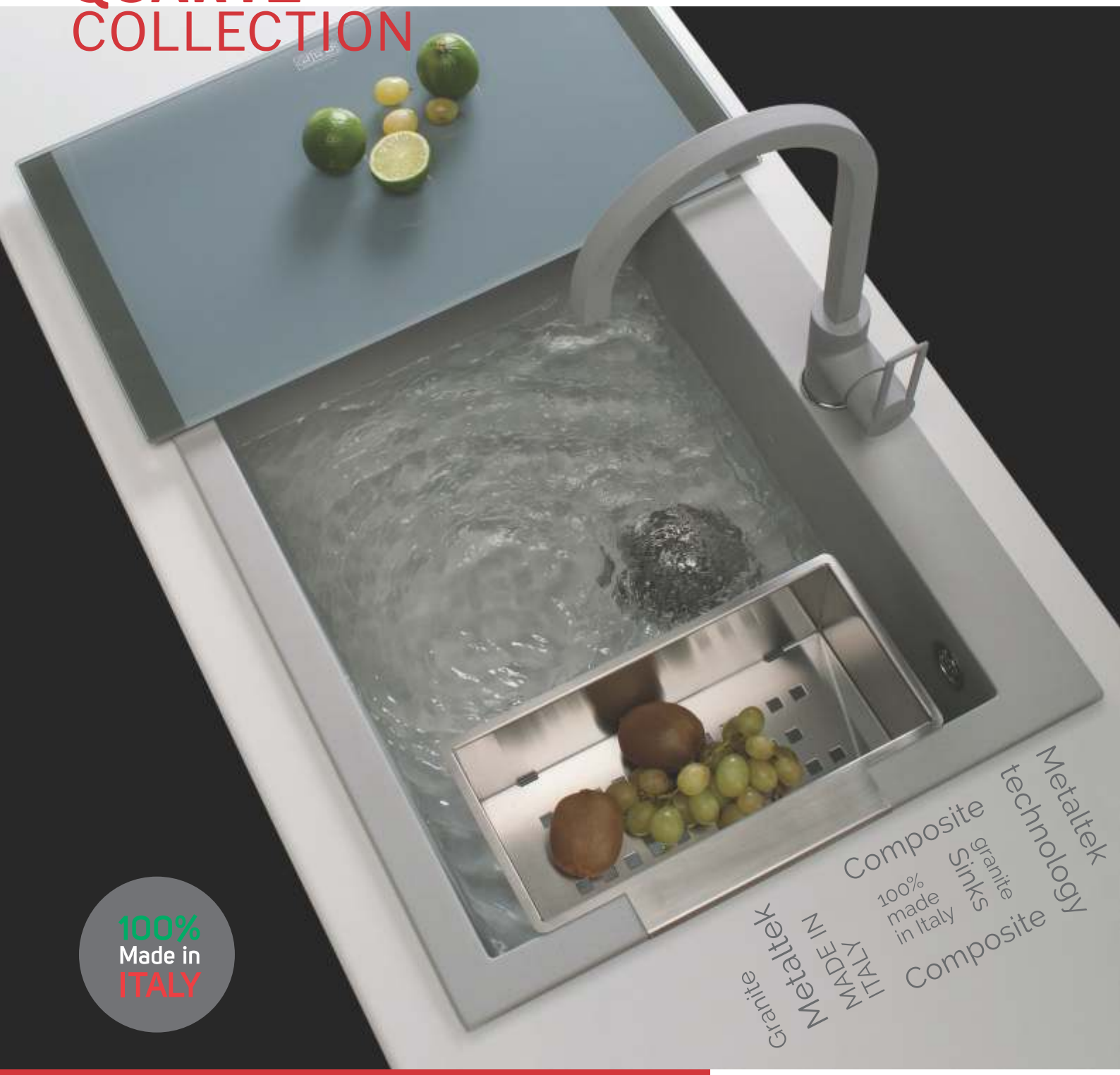

Quartz
Collection

Composite Granite Sinks
are the best products for design, resistance and colour matching

Impact Resistance
UV Protection
Anti-Bacterial Protection
Thermic Shock Resistance

Colours Available

Aluminium **Ghisa**

Quadra 110

CAT. MODEL	QUADRA 110 Single Bowl Kitchen Sink
Overall Size (Inch/mm)	24 x 20 x 8.5 610 x 500 x 220
Material	Metaltek
Colors	Aluminium & Ghisa
MRP Aluminium	₹ **20,215/-**
MRP Ghisa	₹ **19,170/-**

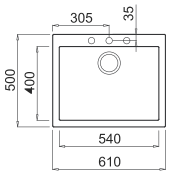

Built-in hole
590 x **480** mm

Quadra 130

CAT. MODEL	QUADRA 130 Single Bowl Kitchen Sink
Overall Size (Inch/mm)	31 x 20 x 8.5 790 x 500 x 220
Material	Metaltek
Colors	Aluminium & Ghisa
MRP Aluminium	₹ **26,270/-**
MRP Ghisa	₹ **25,225/-**

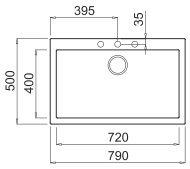

Built-in hole
770 x **480** mm

Best 500

CAT. MODEL	BEST 500 Double Bowl with Single Drain Board
Overall Size (Inch/mm)	45.5 x 20 x 08 1160 x 510 x 200
Material	Metaltek
Colors	Aluminium & Ghisa
MRP Aluminium	₹ **41,475/-**
MRP Ghisa	₹ **40,430/-**

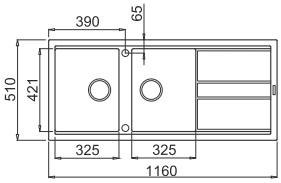

Built-in hole
1140 x **480**

Best 480

CAT. MODEL	BEST 480 Single Bowl Kitchen Sink with Drain Board
Overall Size (Inch/mm)	39.5 x 20 x 08 1000 x 510 x 200
Material	Metaltek
Colors	Aluminium & Ghisa
MRP Aluminium	₹ **32,335/-**
MRP Ghisa	₹ **31,290/-**

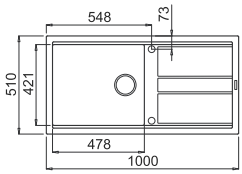

Built-in hole
980 x **480** mm

Best 475

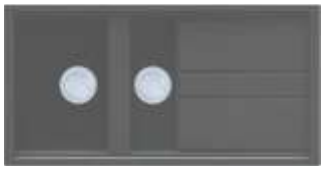

CAT. MODEL	BEST 475 Kitchen Sink with Vegetable Bowl / Drain Board
Overall Size (Inch/mm)	39.5 x 20 x 08 1000 x 510 x 200
Material	Metaltek
Colors	Aluminium & Ghisa
MRP Aluminium	₹ **39,450/-**
MRP Ghisa	₹ **38,400/-**

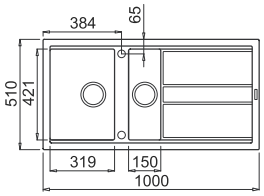

Built-in hole
980 x **480** mm

Best 450

CAT. MODEL	BEST 450 Double Bowl Kitchen Sink
Overall Size (Inch/mm)	32 x 20 x 08 860 x 510 x 200
Material	Metaltek
Colors	Aluminium & Ghisa
MRP Aluminium	₹ **35,410/-**
MRP Ghisa	₹ **34,365/-**

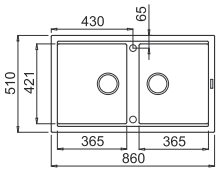

Built-in hole
840 x **480** mm

MIXER COLLECTION

Blade Mixer

Lever mixer with inclined swivel spout.

MIxer hole dimensions: Ø 35 mm

Cat. Model	Finish	MRP (₹)
Blade A	Aluminium	53,010/-
Blade B	Chrome	50,350/-

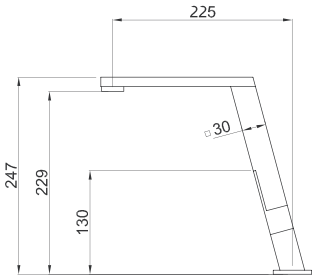

Bridge Mixer

Lever mixer with swivel spout.

MIxer hole dimensions: Ø 35 mm

Cat. Model	Finish	MRP (₹)
Bridge A	Aluminium	27,075/-
Bridge B	Chrome	26,125/-

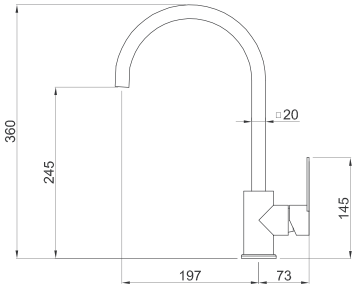

Dove Plus

Lever mixer with high swivel spout and pull-out shower.

MIxer hole dimensions: Ø 35 mm

Cat. Model	Finish	MRP (₹)
Dove Plus A	Aluminium	51,775/-
Dove Plus B	Chrome	49,875/-

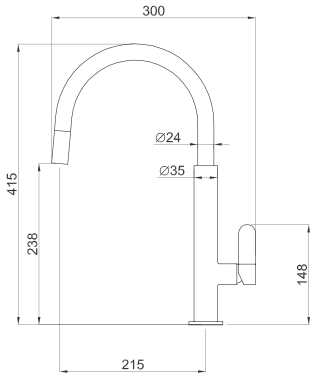

Colander 01

Cat Model: AVI03001
Size: 322 x 194 x 95 mm
MRP: ₹ 10,020/-

Colander 02

Cat Model: AVI03000
Size: 444 x 142 x 103 mm
MRP: ₹ 10,020/-

Basket 01

Cat Model: ACI01306
Size: 444 x 292 x 82 mm
MRP: ₹ 8,120/-

Basket 02

Cat Model: ACI01301
Size: 299 x 384 x 175 mm MRP: ₹ 7,170/-

Glass Chopping Board

Cat Model: ATV01002
MRP: ₹ 11,730/-

For all our Granite kitchen sinks we provided a series of accessories which enrich the aesthetics and functionality of our sinks and optimize all your movements in the kitchen.

COLOURS AND MATERIALS

The chemical composition is made up of natural granite, acrylic resin and, like all the sinks manufactured with the technological leadership G.P.S. system, has an even mass resulting in high resistance to stains, impact and temperature changes. The uniqueness of this product is that have been added the metal particles, making the product with a brilliant and shining finish. The target is to obtain special "metallic effects". The different finishes allow a perfect match between the sink and the other stainless steel components in the kitchen.

METALTEK
GRANITE METALLIC EFFECT

Aluminium

Ghisa

Impact Resistance | UV Protection | Anti-Bacterial Protection | Thermic Shock Resistance

Features

Minimal Bowl Radius | Wider Sink Bowl Divider With Taphole | Bigger Bowls | Professional Drip Edge | Accessories Glide On Special Rims | Integrated Drain Cover.

Jayna Elleci sinks have a **TOTAL ANTI-BACTERIAL PROTECTION,** which has an adequate antibacterial coverage of the mass.

In this way the bacterial organisms are repelled. Reliability and praciticality become a certainty every day in the kitchen.

elleci italian origin

Jayna The Kitchen Essentials

JIO QUARTZ COLLECTION

Jio Quartz Collection

This Collection is made of Natural Quartz minerals for everyday use in modern contemporary kitchens. These sinks will compliment the kitchen with colour matching & making the kitchen aesthetically better.

Colours Available

Metallic Black	Space Grey	Earthy Brown
Mocha Brown	Light Brown	Sky White

JIO 1618

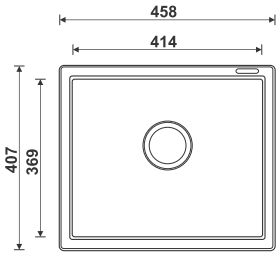

CAT. MODEL	JIO 1618 Single Bowl Kitchen Sink		
Overall Size (Inch/mm)	16 x 18 x 08 407 x 457 x 200		
Material	Natural Quartz		
MRP Space Grey	₹ **5,985/-**	Light Brown	₹ **5,985/-**
MRP Metallic Black	₹ **6,250/-**	Sky White	₹ **5,985/-**
–		Mocha Brown	₹ **6,250/-**

JIO 2118

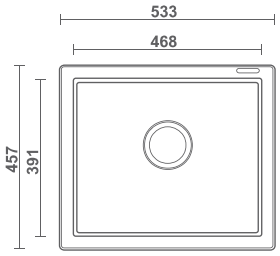

CAT. MODEL	JIO 2118 Single Bowl Kitchen Sink		
Overall Size (Inch/mm)	21 x 18 x 08 533 x 457 x 200		
Material	Natural Quartz		
MRP Space Grey	₹ **6,825/-**	Light Brown	₹ **6,825/-**
MRP Earthy Brown	₹ **6,825/-**	Sky White	₹ **6,825/-**
MRP Metallic Black	₹ **7,140/-**	Mocha Brown	₹ **7,140/-**

JIO 2418

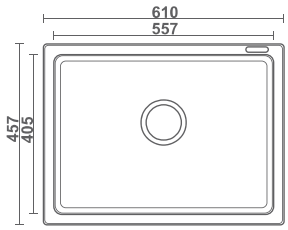

CAT. MODEL	JIO 2418 Single Bowl Kitchen Sink		
Overall Size (Inch/mm)	24 x 18 x 08 610 x 457 x 200		
Material	Natural Quartz		
MRP Space Grey	₹ **7,055/-**	Light Brown	₹ **7,055/-**
MRP Metallic Black	₹ **7,570/-**	Sky White	₹ **7,055/-**
–		Mocha Brown	₹ **7,570/-**

JIO 3417

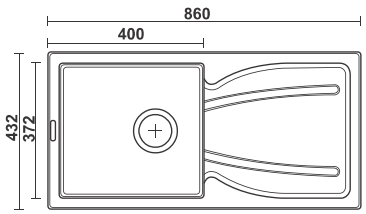

CAT. MODEL	JIO 3417 Single Bowl Kitchen Sink With Drain Board
Overall Size (Inch/mm)	34 x 17 x 08 860 x 432 x 200
Material	Natural Quartz
MRP Space Grey	₹ **11,340/-**
MRP Earthy Brown	₹ **11,340/-**

JIO 3618

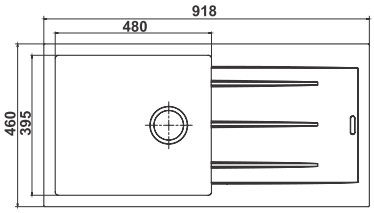

CAT. MODEL	JIO 3618 Single Bowl Kitchen Sink With Drain Board		
Overall Size (Inch/mm)	36 x 18 x 09 918 x 460 x 228		
Material	Natural Quartz		
MRP Space Grey	₹ **11,865/-**	Light Brown	₹ **11,865/-**
MRP Metallic Black	₹ **12,390/-**	Sky White	₹ **11,865/-**
–		Mocha Brown	₹ **12,390/-**

JIO 4520

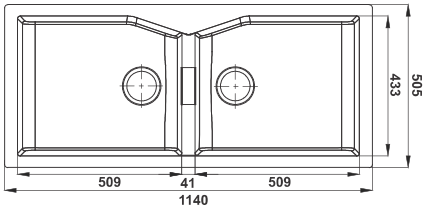

CAT. MODEL	JIO 4520 Double Bowl Kitchen Sink		
Overall Size (Inch/mm)	45 x 20 x 09 1140 x 505 x 225		
Material	Natural Quartz		
MRP Space Grey	₹ **18,375/-**	Light Brown	₹ **18,375/-**
MRP Earthy Brown	₹ **18,375/-**	Sky White	₹ **18,375/-**
MRP Metallic Black	₹ **19,950/-**	Mocha Brown	₹ **19,950/-**

SIGNATURE COLLECTION

AISI 304 18/8 STEEL | RUST PROOF | LIFETIME WARRANTY | GLOSS · MATT FINISHES ANTI-SCRATCH | 100% Non-Magnetic | 145 Models × 215 Sizes

Featuring Sink (top):
OR 01 815 x 510 x 225 mm

ORACLE

A classic single-bowl sink with flange and wide decks for tackling tough tasks with ease. Available in shining glossy finish and satin matt, its elegance and traditional complements any home and assures greater life with very little maintenance.

Features

- 1.0 mm thickness gives durability and longevity
- Glossy, matt & anti-scratch finish
- Modern functional design
- International styling
- Advanced sound deadening technology
- Insect proof concentric coupling

Galaxy
SBF 06 (PREMIUM)
610 x 460 x 200 mm

Jupiter
SBSD 09 (PREMIUM)
1040 x 510 x 178 mm

Apollo
DBF 06 (Deluxe)
940 x 465 x 225 mm

SPARTAN (Sinks without border)

DIMENSIONS			MRP (₹)		
CAT. MODEL	Overall Size (inch/mm)	Bowl Size (inch/mm)	Glossy	Matt	Anti-Scratch
SB 01 (Mini Bowl)	12.5 x 8.5 315 x 215	11 x 07 x 05 270 x 170 x 125	**2,940/-**	**3,045/-**	-
SB 02	18.5 x 16.5 470 x 420	17 x 15 x 07 428 x 380 x 178	**3,990/-**	**4,270/-**	**7,270/-**
SB 02 A	17.5 x 15.5 445 x 395	16 x 14 x 07 408 x 352 x 178	**3,990/-**	**4,270/-**	-

DIMENSIONS			MRP (₹)		
CAT. MODEL	Overall Size (inch/mm)	Bowl Size (inch/mm)	Glossy	Matt	Anti-Scratch
SB 03	19.5 x 16.5 495 x 420	18 x 15 x 08 460 x 380 x 200	**4,805/-**	**5,090/-**	**7,630/-**
SB 04	21.5 x 17.5 545 x 445	20 x 16 x 08 510 x 404 x 200	**5,810/-**	**6,100/-**	**8,615/-**
SB 05	25.5 x 19.5 645 x 495	24 x 18x x 08 600 x 450 x 200	**7,410/-**	**7,685/-**	-
SB 06	23.5 x 18.5 595 x 470	22 x 17 x 08 550 x 430 x 200	**6,430/-**	**6,705/-**	-

DIMENSIONS			MRP (₹)		
CAT. MODEL	Overall Size (inch/mm)	Bowl Size (inch/mm)	Glossy	Matt	Anti-Scratch
SB 08	18 x 18 458 x 458	15 x 15 x 08 380 x 380 x 200	**5,470/-**	**5,760/-**	-
SB 09	20 x 20 510 x 510	15 x 15 x 08 380 x 380 x 200	**6,335/-**	**6,615/-**	-

DIMENSIONS			MRP (₹)		
CAT. MODEL	Overall Size (inch/mm)	Bowl Size (inch/mm)	Glossy	Matt	Anti-Scratch
SB R01	454 mm	ROUND SINK BOWL 398 MM DEPTH 180 MM	**5,575/-**	**5,855/-**	-

DIMENSIONS			MRP (₹)		
CAT. MODEL	Overall Size (inch/mm)	Bowl Size (inch/mm)	Glossy	Matt	Anti-Scratch
SB 07	21 x 21 535 x 535	20 x 20 x 10 510 x 510 x 250	**10,175/-**	**10,450/-**	-

ORACLE (Single bowl sinks with flange)

DIMENSIONS			MRP (₹)	
CAT. MODEL	Overall Size (inch/mm)	Bowl Size (inch/mm)	Glossy	Matt
OR 01	32 x 20 815 x 510	29 x 17 x 09 737 x 432 x 225	**16,275/-**	**16,550/-**
OR 02	30 x 20 760 x 510	27 x 17 x 09 680 x 432 x 225	**14,000/-**	**14,290/-**
OR 03	27 x 20 685 x 510	24 x 17 x 09 610 x 432 x 225	**12,085/-**	**12,365/-**

NEW

DIMENSIONS			MRP (₹)	
CAT. MODEL	Overall Size (inch/mm)	Bowl Size (inch/mm)	Glossy	Matt
OR 04	32 x 20 815 x 510	29 x 17 x 09 737 x 432 x 225	**16,275/-**	**16,550/-**

DIMENSIONS			MRP (₹)		
CAT. MODEL	Overall Size (inch/mm)	Bowl Size (inch/mm)	Glossy	Matt	Anti-Scratch
SBFB Mini	12 x 12 305 x 305	10 x 09 x 4.5 255 x 230 x 115	**2,430/-**	**2,540/-**	-
SBFB Super	16 x 14 408 x 356	14 x 12 x 08 356 x 304 x 200	**3,990/-**	**4,270/-**	-
SBFB Medium	17 x 17 430 x 430	15 x 14 x 07 380 x 355 x 178	**3,990/-**	**4,270/-**	-
SBFB Big	18 x 18 458 x 458	16 x 16 x 08 408 x 408 x 200	**5,785/-**	**6,065/-**	-
SBFB Large	19 x 19 480 x 480	16 x 16 x 08 408 x 408 x 200	**5,925/-**	**6,210/-**	-

DIMENSIONS			MRP (₹)		
CAT. MODEL	Overall Size (inch/mm)	Bowl Size (inch/mm)	Glossy	Matt	Anti-Scratch
SBFB 03	21 x 18 535 x 460	**18 x 16 x 08 460 x 400 x 200**	**5,075/-**	**5,350/-**	**7,700/-**

DIMENSIONS			MRP (₹)		
CAT. MODEL	Overall Size (inch/mm)	Bowl Size (inch/mm)	Glossy	Matt	Anti-Scratch
SBF 01	18 x 16 460 x 405	16 x 14 x 08 410 x 352 x 200	**3,990/-**	**4,270/-**	-
SBF 02	18.5 x 16.5 470 x 420	17 x 15 x 08 428 x 378 x 200	**3,990/-**	**4,270/-**	-
SBF 03	15 x 12 380 x 305	13 x 10 x 06 330 x 250 x 150	**3,290/-**	**3,570/-**	-

DIMENSIONS			MRP (₹)		
CAT. MODEL	Overall Size (inch/mm)	Bowl Size (inch/mm)	Glossy	Matt	Anti-Scratch
SBF 05	24 x 18 610 x 460	20 x 16 x 07 510 x 404 x 178	**5,400/-**	**5,680/-**	-
SBF 06	24 x 18 610 x 460	20 x 16 x 08 510 x 404 x 200	**5,600/-**	**5,885/-**	**8,445/-**
SBF 06 (DX)	24 x 18 610 x 460	20 x 16 x 10 510 x 404 x 250	**6,980/-**	**7,260/-**	-
SBF 07	24 x 18 610 x 460	20 x 16 x 09 510 x 404 x 225	**6,335/-**	**6,620/-**	-

DIMENSIONS			MRP (₹)		
CAT. MODEL	Overall Size (inch/mm)	Bowl Size (inch/mm)	Glossy	Matt	Anti-Scratch
SBFB 01	19 x 16 480 x 408	16 x 14 x 08 408 x 352 x 200	**3,990/-**	**4,270/-**	**6,695/-**
SBFB 01A	19.5 x 16.5 495 x 420	16 x 14 x 08 408 x 352 x 200	**4,110/-**	**4,385/-**	-
SBFB 02	20 x 17 510 x 430	17 x 15 x 08 428 x 380 x 200	**4,405/-**	**4,685/-**	**7,340/-**

DIMENSIONS			MRP (₹)		
CAT. MODEL	Overall Size (inch/mm)	Bowl Size (inch/mm)	Glossy	Matt	Anti-Scratch
SBFB 04	22 x 18 560 x 460	20 x 16 x 08 510 x 404 x 200	**5,450/-**	**5,730/-**	**8,175/-**

DIMENSIONS			MRP (₹)		
CAT. MODEL	Overall Size (inch/mm)	Bowl Size (inch/mm)	Glossy	Matt	Anti-Scratch
SBF 06 (Classic)	24 x 18 610 x 460	20.5 x 15 x 08 520 x 380 x 200	**5,700/-**	**5,995/-**	-

DIMENSIONS			MRP (₹)		
CAT. MODEL	Overall Size (inch/mm)	Bowl Size (inch/mm)	Glossy	Matt	Anti-Scratch
SBF 06 (Premium)	24 x 18 610 x 460	22 x 16 x 08 550 x 404 x 200	**5,935/-**	**6,215/-**	-

DIMENSIONS			MRP (₹)		
CAT. MODEL	Overall Size (inch/mm)	Bowl Size (inch/mm)	Glossy	Matt	Anti-Scratch
SBF 08	27 x 20 685 x 510	24 x 18 x 08 600 x 450 x 200	**7,410/-**	**7,685/-**	**-**
SBF 08 (DX)	27 x 20 685 x 510	24 x 18 x 10 600 x 450 x 250	**9,125/-**	**9,425/-**	**-**

DIMENSIONS			MRP (₹)		
CAT. MODEL	Overall Size (inch/mm)	Bowl Size (inch/mm)	Glossy	Matt	Anti-Scratch
SBF 10	22 x 22 560 x 560	20 x 20 x 10 510 x 510 x 250	**10,530/-**	**10,810/-**	**-**

DIMENSIONS			MRP (₹)		
CAT. MODEL	Overall Size (inch/mm)	Bowl Size (inch/mm)	Glossy	Matt	Anti-Scratch
SBF 09	24 x 20 610 x 510	22 x 17 x 08 560 x 430 x 200	**5,700/-**	**6,000/-**	**-**

DIMENSIONS			MRP (₹)		
CAT. MODEL	Overall Size (inch/mm)	Bowl Size (inch/mm)	Glossy	Matt	Anti-Scratch
SBF E01	25 x 22 635 x 560	20.5 x 15 x 08 520 x 380 x 200	**5,810/-**	**6,100/-**	**-**
SBF E02 (with Hole)	25 x 22 635 x 560	20.5 x 15 x 08 520 x 380 x 200	**5,810/-**	**6,100/-**	**-**

DIMENSIONS			MRP (₹)		
CAT. MODEL	Overall Size (inch/mm)	Bowl Size (inch/mm)	Glossy	Matt	Anti-Scratch
SBF 09A	24 x 20 610 x 510	21 x 17 x 08 535 x 432 x 200	**5,700/-**	**6,000/-**	**8,080/-**

WE ARE COMMITED TO MAINTAIN OUR QUALITY

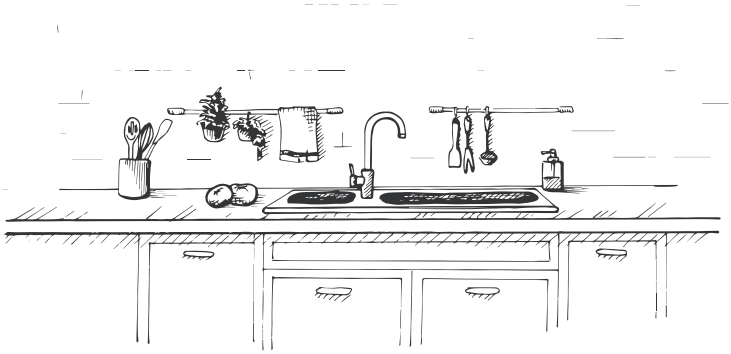

Jayna products are designed engineered and produced with world-class manufacturing standard. The products are crafted using high-grade stainless steel with strict quality norms to ensure consistency.

DIMENSIONS			MRP (₹)		
CAT. MODEL	Overall Size (inch/mm)	Bowl Size (inch/mm)	Glossy	Matt	Anti-Scratch
SBSD 01	32 x 20 810 x 510	14 x 16 x 07 352 x 410 x 178	**6,550/-**	**6,940/-**	**9,400/-**
SBSD 01 (DX)	32 x 20 810 x 510	14 x 16 x 09 352 x 410 x 225	**7,880/-**	**8,265/-**	**-**

DIMENSIONS			MRP (₹)		
CAT. MODEL	Overall Size (inch/mm)	Bowl Size (inch/mm)	Glossy	Matt	Anti-Scratch
SBSD 01 (RR)	32 x 18 810 x 460	16 x 14 x 08 410 x 352 x 200	**6,295/-**	**6,645/-**	**-**

DIMENSIONS			MRP (₹)		
CAT. MODEL	Overall Size (inch/mm)	Bowl Size (inch/mm)	Glossy	Matt	Anti-Scratch
SBSD 02 (RR)	37 x 18 940 x 460	16 x 14 x 08 410 x 352 x 200	**6,790/-**	**7,185/-**	**-**
SBSD 05 (RR)	36 x 18 915 x 460	16 x 14 x 08 410 x 352 x 200	**6,790/-**	**7,185/-**	**-**

DIMENSIONS			MRP (₹)		
CAT. MODEL	Overall Size (inch/mm)	Bowl Size (inch/mm)	Glossy	Matt	Anti-Scratch
SBSD 03 (DX)	36 x 20 915 x 510	24 x 18 x 09 600 x 450 x 225	**10,285/-**	**10,685/-**	**-**

DIMENSIONS			MRP (₹)		
CAT. MODEL	Overall Size (inch/mm)	Bowl Size (inch/mm)	Glossy	Matt	Anti-Scratch
SBSD 03 (Premium)	36 x 20 915 x 510	20 x 16 x 09 510 x 404 x 225	**8,780/-**	**9,170/-**	**-**

DIMENSIONS			MRP (₹)		
CAT. MODEL	Overall Size (inch/mm)	Bowl Size (inch/mm)	Glossy	Matt	Anti-Scratch
SBSD 01 (A)	30 x 20 760 x 510	14 x 16 x 08 352 x 410 x 200	**6,550/-**	**6,940/-**	**-**

NEW

DIMENSIONS			MRP (₹)		
CAT. MODEL	Overall Size (inch/mm)	Bowl Size (inch/mm)	Glossy	Matt	Anti-Scratch
SBSD 01 (B)	32 x 20 810 x 510	14 x 16 x 08 352 x 410 x 200	**7,615/-**	**7,985/-**	**-**

DIMENSIONS			MRP (₹)		
CAT. MODEL	Overall Size (inch/mm)	Bowl Size (inch/mm)	Glossy	Matt	Anti-Scratch
SBSD 02	37 x 18.5 940 x 465	17 x 15 x 07 428 x 378 x 178	**6,905/-**	**7,310/-**	**-**
SBSD 02 (DX)	37 x 18.5 940 x 465	17 x 15 x 09 428 x 378 x 225	**8,215/-**	**8,610/-**	**-**

DIMENSIONS			MRP (₹)		
CAT. MODEL	Overall Size (inch/mm)	Bowl Size (inch/mm)	Glossy	Matt	Anti-Scratch
SBSD 03	36 x 20 915 x 510	18 x 15 x 09 460 x 380 x 225	**8,280/-**	**8,670/-**	**-**

NEW

DIMENSIONS			MRP (₹)		
CAT. MODEL	Overall Size (inch/mm)	Bowl Size (inch/mm)	Glossy	Matt	Anti-Scratch
SBSD 03 A	36 x 19 915 x 482	18 x 15 x 09 460 x 380 x 225	**8,425/-**	**8,855/-**	**-**

DIMENSIONS			MRP (₹)		
CAT. MODEL	Overall Size (inch/mm)	Bowl Size (inch/mm)	Glossy	Matt	Anti-Scratch
SBSD 04 (RR)	45 x 20 1145 x 510	20 x 16 x 08 510 x 404 x 200	**10,105/-**	**10,505/-**	-

DIMENSIONS			MRP (₹)		
CAT. MODEL	Overall Size (inch/mm)	Bowl Size (inch/mm)	Glossy	Matt	Anti-Scratch
SBSD 04	45 x 20 1145 x 510	22 x 16 x 08 550 x 404 x 200	**10,255/-**	**10,650/-**	-
SBSD 04 (DX)	45 x 20 1145 x 510	22 x 16 x 10 550 x 404 x 250	**11,450/-**	**11,990/-**	-

DIMENSIONS			MRP (₹)		
CAT. MODEL	Overall Size (inch/mm)	Bowl Size (inch/mm)	Glossy	Matt	Anti-Scratch
SBSD 05	36 x 18 915 x 460	16 x 14 x 07 410 x 352 x 178	**6,550/-**	**6,940/-**	**9,400/-**
SBSD 05 (DX)	36 x 18 915 x 460	16 x 14 x 09 410 x 352 x 225	**7,880/-**	**8,265/-**	-

DIMENSIONS			MRP (₹)		
CAT. MODEL	Overall Size (inch/mm)	Bowl Size (inch/mm)	Glossy	Matt	Anti-Scratch
SBSD 06	42 x 20 1065 x 510	20 x 16 x 08 510 x 404 x 200	**9,565/-**	**9,970/-**	**13,555/-**
SBSD 06 (DX)	42 x 20 1065 x 510	20 x 16 x 10 510 x 404 x 250	**11,195/-**	**11,585/-**	-

DIMENSIONS			MRP (₹)		
CAT. MODEL	Overall Size (inch/mm)	Bowl Size (inch/mm)	Glossy	Matt	Anti-Scratch
SBSD 07	40 x 18.5 1020 x 465	18 x 15 x 08 460 x 380 x 200	**7,420/-**	**7,815/-**	-

DIMENSIONS			MRP (₹)		
CAT. MODEL	Overall Size (inch/mm)	Bowl Size (inch/mm)	Glossy	Matt	Anti-Scratch
SBSD 09 A	41 x 20 1040 x 510	20 x 16 x 08 510 x 404 x 200	**7,915/-**	**8,315/-**	-
SBSD 09 A (DX)	41 x 20 1040 x 510	20 x 16 x 10 510 x 404 x 250	**9,490/-**	**9,815/-**	-

DIMENSIONS			MRP (₹)		
CAT. MODEL	Overall Size (inch/mm)	Bowl Size (inch/mm)	Glossy	Matt	Anti-Scratch
SBSD 09 (Premium)	41 x 20 1040 x 510	18 x 16 x 07 460 x 400 x 178	**7,840/-**	**8,235/-**	**11,765/-**
SBSD 09 B	41 x 20 1040 x 510	18 x 16 x 08 460 x 400 x 200	**7,715/-**	**8,115/-**	**12,120/-**
SBSD 09 C	39.5 x 19.5 1000 x 500	18 x 16 x 08 460 x 400 x 200	**8,215/-**	**8,610/-**	**12,120/-**
SBSD 09 D	39.5 x 19.5 1000 x 500	22 x 16 x 08 550 x 400 x 200	**8,215/-**	**8,610/-**	-

DIMENSIONS			MRP (₹)		
CAT. MODEL	Overall Size (inch/mm)	Bowl Size (inch/mm)	Glossy	Matt	Anti-Scratch
SBSD 10 (RHD)	41 x 20 1040 x 510	20.5 x 15 x 08 520 x 380 x 200	**12,490/-**	**12,890/-**	-
SBSD 10 (LHD)	41 x 20 1040 x 510	20.5 x 15 x 08 520 x 380 x 200	**12,490/-**	**12,890/-**	-

DIMENSIONS			MRP (₹)		
CAT. MODEL	Overall Size (inch/mm)	Bowl Size (inch/mm)	Glossy	Matt	Anti-Scratch
SBSD 08	56 x 22.5 1420 x 570	24 x 18 x 08 600 x 450 x 200	**14,255/-**	**14,650/-**	-
SBSD 08 (DX)	56 x 22.5 1420 x 570	24 x 18 x 10 600 x 450 x 250	**16,810/-**	**17,205/-**	-

DIMENSIONS			MRP (₹)		
CAT. MODEL	Overall Size (inch/mm)	Bowl Size (inch/mm)	Glossy	Matt	Anti-Scratch
SBSD 11 (RHD)	36 x 20 915 x 510	13.5 x 16.5 x 08 340 x 418 x 200	**10,155/-**	**10,555/-**	-
SBSD 11 (LHD)	36 x 20 915 x 510	13.5 x 16.5 x 08 340 x 418 x 200	**10,155/-**	**10,555/-**	-

DIMENSIONS			MRP (₹)		
CAT. MODEL	Overall Size (inch/mm)	Bowl Size (inch/mm)	Glossy	Matt	Dual Finish
DBF 01	39.5 x 18.5 1000 x 465	17 x 15 x 07 428 x 378 x 178	**10,790/-**	**11,270/-**	-
DBF 01 (DX)	39.5 x 18.5 1000 x 465	17 x 15 x 09 428 x 378 x 225	**12,745/-**	**13,215/-**	**14,590/-**

DIMENSIONS			MRP (₹)		
CAT. MODEL	Overall Size (inch/mm)	Bowl Size (inch/mm)	Glossy	Matt	Dual Finish
DBF 03	32.75 x 20 832 x 510	14 x 16 x 07 352 x 410 x 178	**10,790/-**	**11,615/-**	-
DBF 03 (DX)	32.75 x 20 832 x 510	14 x 16 x 09 352 x 410 x 225	**12,745/-**	**13,215/-**	**14,590/-**

DIMENSIONS			MRP (₹)		
CAT. MODEL	Overall Size (inch/mm)	Bowl Size (inch/mm)	Glossy	Matt	Dual Finish
DBF 05	50 x 20 1270 x 510	22 x 16 x 08 550 x 404 x 200	**17,845/-**	**18,315/-**	-
DBF 05 (DX)	50 x 20 1270 x 510	22 x 16 x 10 550 x 404 x 250	**20,750/-**	**21,225/-**	-

DIMENSIONS			MRP (₹)		
CAT. MODEL	Overall Size (inch/mm)	Bowl Size (inch/mm)	Glossy	Matt	Dual Finish
DBF 07	42 x 20 1065 x 510	18 x 16 x 07 460 x 405 x 178	**14,550/-**	**15,025/-**	-
DBF 07 (DX)	42 x 20 1065 x 510	18 x 16 x 09 460 x 405 x 225	**17,185/-**	**17,645/-**	-

DIMENSIONS			MRP (₹)		
CAT. MODEL	Overall Size (inch/mm)	Bowl Size (inch/mm)	Glossy	Matt	Dual Finish
DBF E01	33 x 22 840 x 560	14 x 15 x 08 355 x 380 x 200	**12,085/-**	**12,550/-**	-
DBF E02 with Hole	33 x 22 840 x 560	14 x 15 x 08 355 x 380 x 200	**12,085/-**	**12,550/-**	-

DIMENSIONS			MRP (₹)		
CAT. MODEL	Overall Size (inch/mm)	Bowl Size (inch/mm)	Glossy	Matt	Dual Finish
DBF 02	45 x 20 1145 x 510	20 x 16 x 08 510 x 404 x 200	**14,985/-**	**15,455/-**	-
DBF 02 (DX)	45 x 20 1145 x 510	20 x 16 x 10 510 x 404 x 250	**17,685/-**	**18,165/-**	-

DIMENSIONS			MRP (₹)		
CAT. MODEL	Overall Size (inch/mm)	Bowl Size (inch/mm)	Glossy	Matt	Dual Finish
DBF 04	56 x 22.5 1420 x 570	24 x 18 x 08 600 x 450 x 200	**19,760/-**	**20,240/-**	-
DBF 04 (DX)	56 x 22.5 1420 x 570	24 x 18 x 10 600 x 450 x 250	**24,390/-**	**24,865/-**	-

DIMENSIONS			MRP (₹)		
CAT. MODEL	Overall Size (inch/mm)	Bowl Size (inch/mm)	Glossy	Matt	Dual Finish
DBF 06	37 x 18.5 940 x 465	16 x 14 x 07 408 x 352 x 178	**10,790/-**	**11,270/-**	-
DBF 06 (DX)	37 x 18.5 940 x 465	16 x 14 x 09 408 x 352 x 225	**12,745/-**	**13,215/-**	**13,765/-**

DIMENSIONS			MRP (₹)		
CAT. MODEL	Overall Size (inch/mm)	Bowl Size (inch/mm)	Glossy	Matt	Dual Finish
DBF 08	37.5 x 20 950 x 510	16 x 16 x 07 405 x 405 x 178	**13,090/-**	**13,555/-**	-
DBF 08 (DX)	37.5 x 20 950 x 510	16 x 16 x 09 405 x 405 x 225	**15,910/-**	**16,390/-**	-

*Free Plumbing Connectors are provided with Apollo Range Sinks

MERCURY (Double Bowl With Single Drain Board Sinks)

DIMENSIONS			MRP (₹)		
CAT. MODEL	Overall Size (inch/mm)	Bowl Size (inch/mm)	Glossy	Matt	Dual Finish
DBSD 01	54.5 x 18.5 1385 x 465	17 x 15 x 07 428 x 378 x 178	**14,450/-**	**15,025/-**	-
DBSD 01(DX)	54.5 x 18.5 1385 x 465	17 x 15 x 09 428 x 378 x 225	**16,395/-**	**16,965/-**	**18,780/-**
DBSD 05 A	47 x 18 1200 x 460	16 x 14 x 08 408 x 356 x 200	**14,450/-**	**15,025/-**	-

DIMENSIONS			MRP (₹)		
CAT. MODEL	Overall Size (inch/mm)	Bowl Size (inch/mm)	Glossy	Matt	Dual Finish
DBSD 02	66.5 x 20 1690 x 510	20 x 16 x 08 510 x 404 x 200	**19,910/-**	**20,480/-**	-
DBSD 02 (DX)	66.5 x 20 1690 x 510	20 x 16 x 10 510 x 404 x 250	**22,820/-**	**23,395/-**	-

DIMENSIONS			MRP (₹)		
CAT. MODEL	Overall Size (inch/mm)	Bowl Size (inch/mm)	Glossy	Matt	Dual Finish
DBSD 03	45 x 20 1145 x 510	14 x 16 x 07 352 x 410 x 178	**14,450/-**	**15,025/-**	-
DBSD 03 (DX)	45 x 20 1145 x 510	14 x 16 x 09 352 x 410 x 225	**16,395/-**	**16,965/-**	-

DIMENSIONS			MRP (₹)		
CAT. MODEL	Overall Size (inch/mm)	Bowl Size (inch/mm)	Glossy	Matt	Dual Finish
DBSD 04	61 x 20 1550 x 510	18 x 16 x 07 460 x 405 x 178	**17,215/-**	**17,795/-**	-
DBSD 04 (DX)	61 x 20 1550 x 510	18 x 16 x 09 460 x 405 x 225	**19,175/-**	**19,735/-**	-

DIMENSIONS			MRP (₹)		
CAT. MODEL	Overall Size (inch/mm)	Bowl Size (inch/mm)	Glossy	Matt	Dual Finish
DBSD 05	47 x 20 1200 x 510	14 x 16 x 08 352 x 410 x 200	**16,120/-**	**16,690/-**	-

DIMENSIONS			MRP (₹)		
CAT. MODEL	Overall Size (inch/mm)	Bowl Size (inch/mm)	Glossy	Matt	Dual Finish
DBSD 01 (A)	54 x 20 1370 x 510	16 x 16 x 08 405 x 405 x 200	**17,950/-**	**18,510/-**	-

*Free Plumbing Connectors are provided with Mercury Range Sinks

MARS (Single bowl with double drain board sinks)

DIMENSIONS			MRP (₹)		
CAT. MODEL	Overall Size (inch/mm)	Bowl Size (inch/mm)	Glossy	Matt	Dual Finish
SBDD 01	52 x 18.5 1320 x 465	17 x 15 x 08 428 x 378 x 200	**12,740/-**	**13,310/-**	-

DIMENSIONS			MRP (₹)		
CAT. MODEL	Overall Size (inch/mm)	Bowl Size (inch/mm)	Glossy	Matt	Dual Finish
SBDD 02	66.5 x 20 1690 x 510	20 x 16 x 08 510 x 404 x 200	**16,520/-**	**17,075/-**	-

VENUS (Double bowl with double Drain board sinks)

DIMENSIONS			MRP (₹)		
CAT. MODEL	Overall Size (inch/mm)	Bowl Size (inch/mm)	Glossy	Matt	Dual Finish
DBDD 01	69.5 x 18.5 1765 x 465	17 x 15 x 08 428 x 378 x 200	**22,675/-**	**23,260/-**	-

DIMENSIONS			MRP (₹)		
CAT. MODEL	Overall Size (inch/mm)	Bowl Size (inch/mm)	Glossy	Matt	Dual Finish
DBDD 02	61 x 20 1550 x 510	14 x 16 x 08 352 x 410 x 200	**21,100/-**	**21,680/-**	-

*Free Plumbing Connectors are provided with Venus Range Sinks

ZODIAC (Sinks With Garbage Bin)

DIMENSIONS			MRP (₹)		
CAT. MODEL	Overall Size (inch/mm)	Bowl Size (inch/mm)	Glossy	Matt	Dual Finish
SBGB 01	32 x 20 810 x 510	20 x 16 x 08 510 x 404 x 200	**11,150/-**	**11,635/-**	-

DIMENSIONS			MRP (₹)		
CAT. MODEL	Overall Size (inch/mm)	Bowl Size (inch/mm)	Glossy	Matt	Dual Finish
SBGB 02	48 x 20 1220 x 510	20 x 16 x 08 510 x 404 x 200	**14,640/-**	**15,120/-**	-

DIMENSIONS			MRP (₹)		
CAT. MODEL	Overall Size (inch/mm)	Bowl Size (inch/mm)	Glossy	Matt	Dual Finish
DBGB 03	48 x 20 1220 x 510	20 x 16 x 08 (Big) 510 x 404 x 200 14 x 16 x 08 (MB) 352 x 410 x 200	**17,115/-**	**17,705/-**	-

DIMENSIONS			MRP (₹)		
CAT. MODEL	Overall Size (inch/mm)	Bowl Size (inch/mm)	Glossy	Matt	Dual Finish
DBGB 04	62 x 20 1575 x 510	20 x 16 x 08 (Big) 510 x 404 x 200 14 x 16 x 08 (MB) 352 x 410 x 200	**20,765/-**	**21,255/-**	**22,525/-**

SYMPHONY (Corner Sinks)

DIMENSIONS			MRP (`)		
CAT. MODEL	Overall Size (inch/mm)	Bowl Size (inch/mm)	Glossy	Matt	Dual Finish
CS 01	36 x 36 915 x 915	14 x 16 x 08 352 x 410 x 200	**20,655/-**	**21,225/-**	-

DIMENSIONS			MRP (₹)		
CAT. MODEL	Overall Size (inch/mm)	Bowl Size (inch/mm)	Glossy	Matt	Dual Finish
CS 03	33 x 33 840 x 840	14 x 16 x 08 352 x 410 x 200	**20,655/-**	**21,225/-**	**22,665/-**

DIMENSIONS			MRP (₹)		
CAT. MODEL	Overall Size (inch/mm)	Bowl Size (inch/mm)	Glossy	Matt	Dual Finish
SBMB 01	32 x 20 810 x 510	20 x 16 x 08 (Big) 510 x 404 x 200 6.5 x 10.5 x 05 (MB) 170 x 270 x 125	**10,500/-**	**10,985/-**	-

DIMENSIONS			MRP (₹)		
CAT. MODEL	Overall Size (inch/mm)	Bowl Size (inch/mm)	Glossy	Matt	Dual Finish
DBMB 03	48 x 20 1220 x 510	20 x 16 x 08 (Big) 510 x 404 x 200 14 x 16 x 08 (Small) 352 x 410 x 200 6.5 x 10.5 x 05 (MB) 170 x 270 x 125	**16,575/-**	**17,060/-**	-

DIMENSIONS			MRP (₹)		
CAT. MODEL	Overall Size (inch/mm)	Bowl Size (inch/mm)	Glossy	Matt	Dual Finish
SBMB 05	45 x 20 1145 x 510	20 x 16 x 08 (Big) 510 x 404 x 200 6.5 x 10.5 x 05 (MB) 170 x 270 x 125	**15,780/-**	**16,260/-**	-

DIMENSIONS			MRP (₹)		
CAT. MODEL	Overall Size (inch/mm)	Bowl Size (inch/mm)	Glossy	Matt	Dual Finish
SBMB 06	30 x 20 760 x 510	14 x 16 x 08 (Big) 352 x 410 x 200 6.5 x 10.5 x 05 Small) 170 x 270 x 125	**10,500/-**	**10,985/-**	**12,060/-**

DIMENSIONS			MRP (₹)		
CAT. MODEL	Overall Size (inch/mm)	Bowl Size (inch/mm)	Glossy	Matt	Dual Finish
SBMB 08 (RHD)	41 x 20 1040 x 510	14 x 16 x 08 (Big) 352 x 410 x 200	**15,445/-**	**15,920/-**	-
SBMB 08 (LHD)		6.5 x 10.5 x 05 (MB) 170 x 270 x 125			

DIMENSIONS			MRP (₹)		
CAT. MODEL	Overall Size (inch/mm)	Bowl Size (inch/mm)	Glossy	Matt	Dual Finish
SBMB 02 (with Drain Board)	48 x 20 1220 x 510	20 x 16 x 08 (Big) 510 x 404 x 200 6.5 x 10.5 x 05 (MB) 170 x 270 x 125	**13,975/-**	**14,460/-**	-

DIMENSIONS			MRP (₹)		
CAT. MODEL	Overall Size (inch/mm)	Bowl Size (inch/mm)	Glossy	Matt	Dual Finish
SBMB 04	41 x 20 1040 x 510	14 x 16 x 08 (Big) 352 x 410 x 200 6.5 x 10.5 x 05 (MB) 170 x 270 x 125	**13,300/-**	**13,775/-**	**15,300/-**

DIMENSIONS			MRP (₹)		
CAT. MODEL	Overall Size (inch/mm)	Bowl Size (inch/mm)	Glossy	Matt	Dual Finish
DBMB 05	41 x 20 1040 x 510	14 x 16 x 08 (Big) 352 x 410 x 200 6.5 x 10.5 x 05 (MB) 170 x 270 x 125	**15,780/-**	**16,260/-**	-

DIMENSIONS			MRP (₹)		
CAT. MODEL	Overall Size (inch/mm)	Bowl Size (inch/mm)	Glossy	Matt	Dual Finish
DBMB 07 (RHD)	41 x 20 1040 x 510	14 x 16 x 08 (Big) 352 x 410 x 200	**14,550/-**	**15,025/-**	-
DBMB 07 (LHD)		10 x 13 x 06 (Small) 250 x 328 x 150	**14,550/-**	**15,025/-**	-

*Drain Board can be placed on LHS or RHS as per demand

DIMENSIONS			MRP (₹)		
CAT. MODEL	Overall Size (inch/mm)	Bowl Size (inch/mm)	Glossy	Matt	Dual Finish
SBMB 09	41 x 20 1040 x 510	13.5 x 16.5 x 08 (Big) 340 x 418 x 200 6.5 x 12 x 05 (MB) 165 x 310 x 125	**15,445/-**	**15,920/-**	-

*Exclusive Plumbing Connectors are provided with Cat. Model No. SBMB 08 & 09

*Free Plumbing Connectors are provided with Jubilee Range Sinks

CROWN (Single Bowl Sinks In 1.5 mm Thickness)

DIMENSIONS			MRP (₹)	
CAT. MODEL	Overall Size (inch/mm)	Bowl Size (inch/mm)	Glossy	Matt
CSB 01 1.5 mm	19 x 16 480 x 408	16 x 14 x 07 410 x 352 x 178	**5,820/-**	**6,100/-**

DIMENSIONS			MRP (₹)	
CAT. MODEL	Overall Size (inch/mm)	Bowl Size (inch/mm)	Glossy	Matt
CSB 04 1.5 mm	24 x 18 610 x 460	20 x 16 x 08 500 x 400 x 200	**8,385/-**	**8,665/-**

DIMENSIONS			MRP (₹)	
CAT. MODEL	Overall Size (inch/mm)	Bowl Size (inch/mm)	Glossy	Matt
CSB 02 1.5 mm	20 x 17 510 x 430	17 x 15 x 08 428 x 380 x 200	**6,385/-**	**6,660/-**
CSB 03 1.5 mm	21 x 18 535 x 460	18 x 15 x 08 460 x 380 x 200	**7,340/-**	**7,630/-**

DIMENSIONS			MRP (₹)	
CAT. MODEL	Overall Size (inch/mm)	Bowl Size (inch/mm)	Glossy	Matt
CSB 05 1.5 mm	27 x 20 685 x 510	24 x 18 x 08 600 x 450 x 200	**10,840/-**	**11,115/-**
CSB 06 1.5 mm	27 x 20 685 x 510	24 x 18 x 10 600 x 450 x 250	**13,320/-**	**13,615/-**

ATLAS (Sinks In 0.8 mm Thickness)

DIMENSIONS			MRP (₹)	
CAT. MODEL	Overall Size (inch/mm)	Bowl Size (inch/mm)	Glossy	Matt
ATL 01 0.8 mm	19 x 16 480 x 405	16 x 14 x 07 408 x 350 x 180	**3,575/-**	**3,860/-**

DIMENSIONS			MRP (₹)	
CAT. MODEL	Overall Size (inch/mm)	Bowl Size (inch/mm)	Glossy	Matt
ATL 02 0.8 mm	20 x 17 510 x 430	17 x 15 x 7.5 430 x 380 x 190	**3,780/-**	**4,075/-**

DIMENSIONS			MRP (₹)	
CAT. MODEL	Overall Size (inch/mm)	Bowl Size (inch/mm)	Glossy	Matt
ATL 03 0.8 mm	21 x 18 530 x 460	18 x 15 x 7.5 458 x 380 x 190	**4,335/-**	**4,630/-**
ATL 04 0.8 mm	24 x 18 610 x 460	20 x 16 x 08 500 x 400 x 200	**5,120/-**	**5,420/-**

DIMENSIONS			MRP (₹)	
CAT. MODEL	Overall Size (inch/mm)	Bowl Size (inch/mm)	Glossy	Matt
ATL 05 0.8 mm	36 x 18 915 x 460	16 x 14 x 07 408 x 350 x 180	**5,870/-**	**6,155/-**

PLUTO (Wash Basins)

DIMENSIONS			MRP (₹)	
CAT. MODEL	Overall Size (inch/mm)	Bowl Size (inch/mm)	Glossy	Matt
WB 01	18 x 12 460 x 300	15.5 x 7.5 x 5.5 390 x 190 x 140	**2,345/-**	**2,675/-**
WB 02	21 x 13.5 530 x 345	18 x 10.5 x 6 457 x 257 x 150	**3,550/-**	**3,860/-**
WB 03	21 x 15 530 x 380	18 x 10.5 x 6 457 x 257 x 150	**3,810/-**	**4,130/-**

DIMENSIONS			MRP (₹)	
CAT. MODEL	Overall Size (inch/mm)	Bowl Size (inch/mm)	Glossy	Matt
WB 04	12 x 12 305 x 305	10 x 09 x 4.5 255 x 230 x 115	**2,215/-**	**2,320/-**

DIMENSIONS			MRP (₹)	
CAT. MODEL	Overall Size (inch/mm)	Bowl Size (inch/mm)	Glossy	Matt
WB 05	14 x 18.5 356 x 470	10 x 16.5 x 6 250 x 420 x 150	**3,175/-**	**3,520/-**

NEPTUNE (Lavatory Pans)

DIMENSIONS			MRP (₹)	
CAT. MODEL	Overall Size (inch/mm)	Bowl Size (inch/mm)	Glossy	Matt
LP 01 (Without Flushing)	724 x 578	4" Outlet 100 mm	**7,660/-**	**7,945/-**

DIMENSIONS			MRP (₹)	
CAT. MODEL	Overall Size (inch/mm)	Bowl Size (inch/mm)	Glossy	Matt
LP 02 (With Flushing)	724 x 578	4" Outlet 100 mm	**8,930/-**	**9,215/-**

DIMENSIONS			MRP (₹)	
CAT. MODEL	Overall Size (inch/mm)	Bowl Size (inch/mm)	Glossy	Matt
LP 03 (Without Flushing)	23 x 19 585 x 480	4" Outlet 100 mm	**5,850/-**	**6,130/-**

DIMENSIONS			MRP (₹)	
CAT. MODEL	Overall Size (inch/mm)	Bowl Size (inch/mm)	Glossy	Matt
LP 04 (With Flushing)	23 x 19 585 x 480	4" Outlet 100 mm	**6,675/-**	**6,950/-**

DIMENSIONS			MRP (₹)	
CAT. MODEL	Overall Size (inch/mm)	Bowl Size (inch/mm)	Glossy	Matt
LP 05 (Without Flushing)	630 x 595	4" Outlet 100 mm	**7,065/-**	**7,350/-**

DIMENSIONS			MRP (₹)	
CAT. MODEL	Overall Size (inch/mm)	Bowl Size (inch/mm)	Glossy	Matt
LP 06 (With Flushing)	630 x 595	4" Outlet 100 mm	**7,865/-**	**8,160/-**

Sanitary Essentials

AISI 304
18/8 STEEL | RUST PROOF | 100% Non-Magnetic

Sanitaryware at public places is exposed to heavy usage and high maintenance. Jayna Provides durable products crafted in 1 mm and 1.2 mm stainless steel thickness for sustainable use.

The urinals, troughs, basins & washing table are available in different designs and varied sizes and are easy to clean and maintain for everyday use.

"BUILT TO LAST

Commercial Sink

- Thickness: 1.2 mm
- Overall Dimension: 1600 x 510 x 475 mm
- Bowl Dimension: 350 x 400 x 225 mm
- Mixer Hole: Two 35 mm
- Rear Splashback: Included

DIMENSIONS		MRP (₹)
Cat. Model	Overall Size (mm)	Matt
JCS 01	1600 x 510 x 475	**39,270/-**

Urinal Pod

- Thickness: 1.2 mm
- Overall Width: 235 mm
- Overall Height: 650 mm
- Overall Length: 400 mm
- Type of Mounting: Wall Mounting
- Waste Size: 46 mm
- Water Inlet: Exposed
- Water Outlet: Concealed
- Exposed Sparge Pipe: Included

DIMENSIONS		MRP (₹)
Cat. Model	Overall Size (mm)	Matt
SUP 01A	400 mm	**9,690/-**

Hand Wash Trough

- Thickness: 1.2 mm
- Overall Width: 420 mm
- Overall Height: 350 mm
- Overall Length: 900 mm
- Basin Depth: 150 mm
- Type of Mounting: Wall Mounting
- Waste Size: 50 mm
- Rear Splashback: Included 200mm

DIMENSIONS			MRP (₹)
Cat. Model	Overall Size (mm)	Bowl Size (mm)	
HWT 01	900 mm	800x295x150	**20,910/-**
HWT 02	1200 mm	1100x295x150	**28,050/-**

Urinal

- Thickness: 1.2 mm
- Overall Width: 235 mm
- Overall Height: 650 mm
- Overall Length: 1200 mm
- Type of Mounting: Wall Mounting
- Waste Size: 46 mm
- Water Inlet: Exposed
- Water Outlet: Concealed
- Exposed Sparge Pipe: Included

DIMENSIONS		MRP (₹)
Cat. Model	Overall Size (mm)	Matt
MUP 01	900 mm	**32,130/-**
MUP 02	1200 mm	**42,330/-**
MUP 03	1500 mm	**52,530/-**
MUP 04	1800 mm	**63,495/-**

Hand Wash Trough

- Thickness: 1.2 mm
- Overall Width: 420 mm
- Overall Height: 170 mm
- Overall Length: 900 mm
- Basin Depth: 150 mm
- Type of Mounting: Wall Mounting
- Waste Size: 50 mm

DIMENSIONS			MRP (₹)
Cat. Model	Overall Size (mm)	Bowl Size (mm)	
HWT 03	900 mm	800x295x150	**18,870/-**
HWT 04	1200 mm	1100x295x150	**26,010/-**

Tissue Dispenser Box

DIMENSIONS		MRP (₹)
Cat. Model	Overall Size (mm)	Matt
TDB 01	440 x 205 x 1520	**41,410/-**

- Thickness: 1.2 mm
- Type of Mounting: Wall Mounting
- Overall Dimension: 440 x 205 x 1520 mm
- Waste receptacle : Included

Hand Wash Basin (Hospital Use)

- Thickness: 1.2 mm
- Operation: Knee Operated Basin
- Rear Splashback: Included 190 mm
- Type of Mounting: Wall Mounting
- Overall Dimension: 400 x 320 x 505 mm
- Drainage: Included

DIMENSIONS			MRP (₹)
Cat. Model	Overall Size (mm)	Bowl Size (mm)	
HWB 01	400x320x505 mm	315x225x140	**18,870/-**

Hand Free Wash Sink

DIMENSIONS			MRP (₹)
Cat. Model	Overall Size (mm)	Bowl Size (mm)	Matt
HFWS 01	500x530x1063	400x377x200	**35,495/-**

- Material : SS 304
- Operation : Foot Pedal Operated Faucets And Hand Wash Soap Dispenser
- Rear Splashback : 200(mm) Included
- Faucet : Included

**Customization for possible orders on request

SINK DRAINER		
CAT. MODEL	Size (mm)	MRP (₹)
DR 01	Ø 114	**615/-**

SINK DRAINER (Small)		
CAT. MODEL	Size (mm)	MRP (₹)
DR 02	Ø 70	**260/-**

SINK STRAINER		
CAT. MODEL	Size (mm)	MRP (₹)
DR 03	Ø 70	**220/-**

STAINLESS STEEL DRAINER CAP		
CAT. MODEL	Size (mm)	MRP (₹)
DC 01	Ø 114	**745/-**

ROLL MATT (Square)		
CAT. MODEL	Size (mm)	MRP (₹)
RMS 01	440 x 440	**3,875/-**

ROLL MATT (Round)		
CAT. MODEL	Size (mm)	MRP (₹)
RMR 02	440 x 440	**3,325/-**

WOODEN CHOPPING BOARDS

CHOPPING BOARDS - Used for hygienic cutting of fruits and vegitables			
Description	CAT. MODEL	Outer Size (mm)	MRP (₹)
WOODEN CHOPPING BOARD	WCB 06	387 x 355	**1,375/-**

DRAIN TRAY			
Description		MRP (₹)	
CAT. MODEL	Size (mm)	Glossy	Matt
MT 01	16 x 14	**3770/-**	**4,125/-**
MT 02	20 x 16	**4,915/-**	**5,270/-**
MT 03	16 x 16	**4,300/-**	**4,655/-**

SOAP DISPENSERS
For a convenient access to the soap for washing hands or utensils to maintain a hygienic work environment.

SINK DRAINER (Round)		
CAT. MODEL	Suitable for	MRP (₹)
SDR 01	Designo Sinks	**1,730/-**

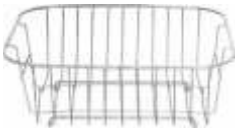

STAINLESS STEEL CROCKERY BASKET		
Description		MRP (₹)
CAT. MODEL	Size (mm)	Glossy
SSCB 01	16 x 14	**1,025/-**
SSCB 02	17 x 15	**1,260/-**
SSCB 03	18 x 15	**1,260/-**
SSCB 04	20 x 16	**1,675/-**

PLUMBING CONNECTOR	
CAT. MODEL	M.R.P
PC 01	**700/-**

*Plumbing Connector for maximum length of 600 mm

PLUMBING CONNECTOR WITH BOTTLE TRAP	
CAT. MODEL	M.R.P
PC 02	**1,305/-**

BOTTLE TRAP	
CAT. MODEL	M.R.P
BT 01	**700/-**

* Ø 1-1/2 inch inlet & Ø 40 mm outlet

BOTTLE TRAP	
CAT. MODEL	M.R.P
BT 02	**700/-**

* Ø 1-1/4 inch inlet & Ø 40 mm outlet

PVC FLEXIBLE WASTE PIPE	
CAT. MODEL	M.R.P
FP 01	**185/-**

* Ø 1-1/2 inch inlet & Ø 32 mm outlet

PVC FLEXIBLE WASTE PIPE	
CAT. MODEL	M.R.P
FP 02	**205/-**

* Ø 1-1/2 inch inlet / Ø 1-1/4 inch inlet & Ø 32 mm outlet

PRODUCT DESCRIPTION & DIMENSIONS		MRP (₹)	
CAT. MODEL	Features / Size	Glossy	Matt
RB 01	Stainless Steel Round Basin (With hole) Thickness: 1.0 mm Outer Size: ∅ 465 mm Depth: 180 mm	**4,595/-**	**5,035/-**

PRODUCT DESCRIPTION & DIMENSIONS		MRP (₹)	
CAT. MODEL	Features / Size	Glossy	Matt
RB 02	Stainless Steel Round Basin Thickness: 1.0 mm Outer Size: ∅ 470 mm Inner Size: ∅ 408 mm Depth: 155 mm	**4,370/-**	**4,810/-**

PRODUCT DESCRIPTION & DIMENSIONS		MRP (₹)	
CAT. MODEL	Features / Size	Glossy	Matt
RB 03	Stainless Steel Round Basin Thickness: 1.0 mm Outer Size: ∅ 425 mm Inner Size: ∅ 370 mm Depth: 165 mm	**4,370/-**	**4,810/-**

PRODUCT DESCRIPTION & DIMENSIONS		MRP (₹)	
CAT. MODEL	Features / Size	Glossy	Matt
RB 03A	Stainless Steel Round Basin Thickness: 2.5 mm Outer Size: ∅ 410 mm Inner Size: ∅ 370 mm Depth: 165 mm	**7,430/-**	**7,865/-**

PRODUCT DESCRIPTION & DIMENSIONS		MRP (₹)	
CAT. MODEL	Features / Size	Glossy	Matt
RB 04A	Stainless Steel Round Basin Thickness: 2.0 mm Outer Size: ∅ 445 mm Depth: 140 mm	**8,180/-**	**8,620/-**

PRODUCT DESCRIPTION & DIMENSIONS		MRP (₹)	
CAT. MODEL	Features / Size	Glossy	Matt
RB 05	Stainless Steel Round Basin Thickness: 1.0 mm Outer Size: ∅ 270 mm Inner Size: ∅ 250 mm Depth: 120 mm	**2,155/-**	**2,260/-**

PRODUCT DESCRIPTION & DIMENSIONS		MRP (₹)	
CAT. MODEL	Features / Size	Glossy	Matt
RB 06	Stainless Steel Round Basin Thickness: 1.0 mm Outer Size: ∅ 375 mm Inner Size: ∅ 325 mm Depth: 135 mm	**3,390/-**	**3,835/-**

PRODUCT DESCRIPTION & DIMENSIONS		MRP (₹)
CAT. MODEL	Features / Size	
JS 1717 WB (With Stand)	17 x 17 430 x 430	**26,945/-**

*Faucet price not included in M.R.P.
Wash Basin in 3 mm thickness

PELICAN (Stainless Steel Pedestals)

DIMENSIONS	MRP (₹)	
CAT. MODEL	Glossy	Matt
PS 01	**5,500/-**	**6,000/-**

DIMENSIONS	MRP (₹)	
CAT. MODEL	Glossy	Matt
PS 02	**6,540/-**	**7,040/-**

DIMENSIONS	MRP (₹)	
CAT. MODEL	Glossy	Matt
PS 03	**7,340/-**	**7,840/-**

DIMENSIONS	MRP (₹)	
CAT. MODEL	Glossy	Matt
PS 04	**8,145/-**	**8,650/-**

DIMENSIONS	MRP (₹)	
CAT. MODEL	Glossy	Matt
PS 05	**8,890/-**	**9,405/-**

DIMENSIONS	MRP (₹)	
CAT. MODEL	Glossy	Matt
PS 06	**10,765/-**	**11,260/-**

PELICAN (Bracket Stands For Round Wash Basins)

DIMENSIONS	MRP (₹)	
CAT. MODEL	Glossy	Matt
RBS 01	**5,390/-**	**5,805/-**

DIMENSIONS	MRP (₹)	
CAT. MODEL	Glossy	Matt
RBS 02	**5,390/-**	**5,805/-**

DIMENSIONS	MRP (₹)	
CAT. MODEL	Glossy	Matt
RBS 02RR	**4,420/-**	**4,845/-**

DIMENSIONS	MRP (₹)	
CAT. MODEL	Glossy	Matt
RBS 03	**2,710/-**	**3,135/-**

DIMENSIONS	MRP (₹)	
CAT. MODEL	Glossy	Matt
RBS 04	**3,555/-**	**3,970/-**

DIMENSIONS	MRP (₹)	
CAT. MODEL	Glossy	Matt
WBT 01	**1,290/-**	**1,705/-**
WBT 02	**1,955/-**	**2,365/-**

PRODUCT DESCRIPTION & DIMENSIONS		MRP (₹)	
CAT. MODEL	Features / Size	Glossy	Matt
RBGS 01	The standard set consists of the following: 1. Stainless Steel Round Basin Size: ∅ 410 x 370 mm; Depth: 165 mm; Thickness: 2.5 mm 2. Stainless Steel Pedestal with Floor mounting attachment and fittings 3. One Glass Counter (Toughened) with Stainless Steel Bracket	**20,070/-**	**21,695/-**

PRODUCT DESCRIPTION & DIMENSIONS		MRP (₹)	
CAT. MODEL	Features / Size	Glossy	Matt
RBGS 02	The standard set consists of the following: 1. Stainless Steel Round Basin Size: ∅ 410 x ∅ 370 mm; Depth: 165 mm; Thickness: 2.5 mm 2. Stainless Steel Pedestal with Floor mounting attachment and fittings 3. One Glass Counter (Toughened) with Stainless Steel Bracket	**22,610/-**	**24,225/-**

PRODUCT DESCRIPTION & DIMENSIONS		MRP (₹)	
CAT. MODEL	Features / Size	Glossy	Matt
RBGS 03	The standard set consists of the following: 1. Stainless Steel Round Basin Size: ∅ 410 x ∅ 370 mm; Depth: 165 mm; Thickness: 2.5 mm 2. Stainless Steel Pedestal with Floor mounting attachment and fittings 3. One Glass Counter (Toughened) with Stainless Steel Bracket	**26,695/-**	**28,320/-**

PRODUCT DESCRIPTION & DIMENSIONS		MRP (₹)	
CAT. MODEL	Features / Size	Glossy	Matt
RBGS 04	The standard set consists of the following: 1. Stainless Steel Round Basin Size: ∅ 470 x ∅ 408 mm; Depth:155 mm; Thickness:1.0 mm 2. Stainless Steel Conical Pedestal with Floor mounting attachment and fittings 3. One Semi Round Glass Counter (Toughened with moulding)	**29,230/-**	**30,855/-**

PRODUCT DESCRIPTION & DIMENSIONS		MRP (₹)	
CAT. MODEL	Features / Size	Glossy	Matt
RBGS 05	The standard set consists of the following: 1. Stainless Steel Round Basin Size: ∅ 445 mm; Depth:140 mm; Thickness:2.0 mm 2. Stainless Steel Conical Pedestal with Floor mounting attachment and fittings 3. One Glass Counter (Toughened) with Stainless steel bracket	**32,690/-**	**34,305/-**

PRODUCT DESCRIPTION & DIMENSIONS		MRP (₹)	
CAT. MODEL	Features / Size	Glossy	Matt
RBPS 04	The standard set consists of the following: 1. Stainless Steel Round Basin Size: ∅ 470 x ∅ 408 mm; Depth: 155 mm; Thickness:1.0 mm 2. Stainless Steel Conical Pedestal with Floor mounting attachment and fittings	**24,315/-**	**25,935/-**

PRODUCT DESCRIPTION & DIMENSIONS		MRP (₹)	
CAT. MODEL	Features / Size	Glossy	Matt
RBPS 01	The standard set consists of the following: 1. Stainless Steel Round Basin Size: ∅ 410 x ∅ 370 mm; Depth: 165 mm; Thickness: 2.5 mm 2. Stainless Steel Pedestal with Floor mounting attachment and wall mount pipe	**13,200/-**	**14,820/-**
RBPS 01 RR	The standard set consists of the following: 3. Stainless Steel Round Basin Size: ∅ 425 x ∅ 370 mm; Depth: 165 mm; Thickness: 1.0 mm 4. Stainless Steel Pedestal with Floor mounting attachment and wall mount pipe	**10,480/-**	**12,090/-**

PRODUCT DESCRIPTION & DIMENSIONS		MRP (₹)	
CAT. MODEL	Features / Size	Glossy	Matt
RBPS 02	The standard set consists of the following: 1. Stainless Steel Round Basin Size: ∅ 410 x ∅ 370 mm; Depth:165 mm; Thickness: 2.5 mm 2. Stainless Steel Conical Shaped Pedestal with Floor mounting attachment and fittings	**15,940/-**	**17,555/-**
RBPS 02 RR	The standard set consists of the following: 3. Stainless Steel Round Basin Size: ∅ 425 x ∅ 370 mm; Depth: 165 mm; Thickness: 1.0 mm 4. Stainless Steel Conical Shaped Pedestal with Floor mounting attachment and fittings	**13,140/-**	**14,760/-**

Faucets are not a part of the standard products

COLLECTION INTERNATIONAL

NEW SERIES

ADVANTAGE

INGRAINED

AISI 304 18/8 STEEL | RUST PEOOF | LIFETIME WARRANTY | 100% Non-Magnetic | 145 Models × 215 Sizes

Combo Series

We want perfection in everything we do & everything we have. Kitchen is not exception either. Jayna presents Collection International combo series of sinks with essential accessories to add health, hygiene, convenience and sophistication in your kitchen.

Features

- 1.0/1.2 mm thickness gives durability and longevity
- Unique brushed/satin finish
- Modern functional design
- International styling
- Advanced sound deadening technology
- Insect proof concentric coupling

Featuring Sink (top):
Double Bowl Kitchen Sink with Single Drain Board
Cat. Model: JNS 4720T R
(1200 x 510 x 225 mm)

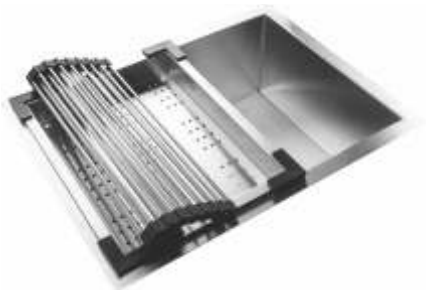

Cat Model No: COMBO - 01

Single Bowl Kitchen Sink

Cat Model:	JNS 2418
Overall Size:	24 x 18 Inch / 610 x 460 mm
Bowl Size:	21 x 16 x 09 Inch / 550 x 400 x 225 mm
Finish:	Satin
Thickness:	1.0 mm

Included	Cat Model	Quantity
Kitchen Sink:	JNS 2418	1
Wire Grid:	WGN 03	1
Drainer Cap:	DC 01	1
Colander (2"):	JC 02	1
Wooden Chopping Board:	WCB 06	1
Roll Mate:	RMR 02	1

MRP (₹) 20,550/-

Cat Model No: COMBO - 02

Single Bowl Kitchen Sink

Cat Model:	JNS 2420T
Overall Size:	24 x 20 Inch / 610 x 510 mm
Bowl Size:	21 x 16 x 09 Inch / 550 x 400 x 225 mm
Finish:	Satin
Thickness:	1.0 mm

Included	Cat Model	Quantity
Kitchen Sink:	JNS 2420T	1
SS-304 Grade Faucet:	SF 01	1
Wire Grid:	WGN 03	1
Drainer Cap:	DC 01	1
Colander (2"):	JC 02	1
Wooden Chopping Board:	WCB 06	1

MRP (₹) 28,235/-

Cat Model No: COMBO - 03

Single Bowl Kitchen Sink

Cat Model:	JNS 2420T
Overall Size:	24 x 20 Inch / 610 x 510 mm
Bowl Size:	21 x 16 x 09 Inch / 550 x 400 x 225 mm
Finish:	Satin
Thickness:	1.0 mm

Included	Cat Model	Quantity
Kitchen Sink:	JNS 2420T	1
SS-304 Grade Faucet:	SF 05 R	1
Wire Grid:	WGN 03	1
Drainer Cap:	DC 01	1
Colander (5"):	JS 06	1
Wooden Chopping Board:	WCB 06	1

MRP (₹) 38,805/-

Cat Model No: COMBO - 04

Kitchen Sink With Drain Board

Cat Model:	JNS 3618
Overall Size:	36 x 18 Inch / 915 x 460 mm
Bowl Size:	18 x 16 x 09 Inch / 460 x 400 x 225 mm
Finish:	Satin
Thickness:	1.0 mm

Included	Cat Model	Quantity
Kitchen Sink:	JNS 3618	1
Wire Grid:	WGN 06	1
Drainer Cap:	DC 01	1
Colander (5"):	JS 06	1
Roll Mate:	RMR 02	1

MRP (₹) 23,455/-

Cat Model No: COMBO - 05

Kitchen Sink With Drain Board

Cat Model:	JNS 3620T
Overall Size:	36 x 20 Inch / 915 x 510 mm
Bowl Size:	18 x 16 x 09 Inch / 460 x 400 x 225 mm
Finish:	Satin
Thickness:	1.0 mm

Included	Cat Model	Quantity
Kitchen Sink:	JNS 3620T	1
SS-304 Grade Faucet:	SF 01	1
Wire Grid:	WGN 06	1
Drainer Cap:	DC 01	1
Colander (2"):	JC 02	1
Roll Mate:	RMR 02	1

MRP (₹) 34,470/-

Cat Model No: COMBO - 06

Double Bowl Kitchen Sink

Cat Model:	JNS 4520T DB
Overall Size:	45 x 20 Inch / 1145 x 510 mm
Bowl Sizes:	21 x 16 x 09 Inch / 527 x 400 x 225 mm 21 x 16 x 09 Inch / 527 x 400 x 225 mm
Finish:	Satin
Thickness:	1.0 mm

Included	Cat Model	Quantity
Kitchen Sink:	JNS 4520T DB	1
SS-304 Grade Faucet:	SF 05 R	1
Wire Grid:	WGN 09	1
Drainer Cap:	DC 01	2
Colander (5"):	JS 06	1
Wooden Chopping Board:	WCB 06	1
Roll Mate:	RMR 02	1

MRP (₹) 54,740/-

Cat Model No: COMBO - 07

Double Bowl Kitchen Sink

Cat Model:	JNS 4520 DB
Overall Size:	45 x 20 Inch / 1145 x 510 mm
Bowl Sizes:	21 x 18 x 09 Inch / 527 x 450 x 225 mm 21 x 18 x 09 Inch / 527 x 450 x 225 mm
Finish:	Satin
Thickness:	1.0 mm

Included	Cat Model	Quantity
Kitchen Sink:	JNS 4520 DB	1
Wire Grid:	WGN 10	1
Drainer Cap:	DC 01	2
Colander (2"):	JC 01	1
Colander (5"):	JS 05	1
Wooden Chopping Board:	WCB 06	1
Roll Mate:	RMR 02	1

MRP (₹) 38,020/-

Cat Model No: COMBO - 08

Double Bowl Kitchen Sink With Drain Board

Cat Model:	JNS 4720T R
Overall Size:	47 x 20 Inch / 1200 x 510 mm
Bowl Sizes:	16 x 16 x 09 Inch / 400 x 400 x 225 mm 14 x 16 x 09 Inch / 350 x 400 x 225 mm
Finish:	Satin
Thickness:	1.0 mm

Included	Cat Model	Quantity
Kitchen Sink:	JNS 4720T R	1
SS-304 Grade Faucet:	SF 03	1
SS-304 Grade Faucet:	SF 08F (Faucet for RO)	1
Wire Grid:	WGN 05	1
Drainer Cap:	DC 01	2
Colander (5"):	JS 06	1
Wooden Chopping Board:	WCB 06	1

MRP (₹) 48,635/- Combo offer also applicable forJNS 4720T L COMBO - 08A

Cat Model No: COMBO - 09A

Single Bowl Sink with Veg Bowl & Drain Board

Cat Model:	JD 4020 ML
Overall Size:	45 x 20 Inch / 1000 x 500 mm
Bowl Sizes:	14 x 16 x 08.5 Inch / 350 x 400 x 215 mm 07 x 12 x 05.5 Inch / 180 x 300 x 135 mm
Finish:	Satin
Thickness:	1.0 mm

Included	Cat Model	Quantity
Kitchen Sink:	JD 4020 ML	1
SS-304 Grade Faucet:	SF 06 P	1
Wire Grid:	WG 04	1
Drainer Cap:	DC 01	2
Colander (2”):	JC 02	1
Wooden Chopping Board:	WCB 06	1
Soap Dispenser:	SDR 01	1

MRP (₹) 50,910/- Combo offer also applicable forJD 4020MR COMBO - 09

Cat Model No: COMBO - 10A

Double Bowl Kitchen Sink With Drain Board

Cat Model:	JD 4620 L
Overall Size:	46 x 20 inch / 1160 x 500 mm
Bowl Sizes:	14 x 16 x 08.5 Inch / 350 x 400 x 215 mm 16 x 14 x 08.5 Inch / 400 x 350 x 215 mm
Finish:	Satin
Thickness:	1.0 mm

Included	Cat Model	Quantity
Kitchen Sink:	JD 4620 L	1
SS-304 Grade Faucet:	SF 03	1
Wire Grid:	WG 04	1
Drainer Cap:	DC 01	2
Colander (5”):	JS 06	1
Wooden Chopping Board:	WCB 06	1
Soap Dispenser:	SDR 01	1

MRP (₹) 47,585/- Combo offer also applicable forJD 4620 R COMBO - 10

Cat Model No: COMBO - 11

Doble Bowl Kitchen Sink

Cat Model:	JS 4520 D
Overall Size:	45 x 20 inch / 1145 x 510 mm
Bowl Sizes:	21 x 16 x 09 Inch / 530 x 400 x 225 mm
Finish:	Brush
Thickness:	1.2 mm

Included	Cat Model	Quantity
Kitchen Sink:	JS 4520 D	1
SS-304 Grade Faucet:	SF 04	1
Wire Grid:	WG 02A	1
Drainer Cap:	DC 01	2
Colander (5”):	JS 06	1
Colander (2”):	JC 02	1
Soap Dispenser:	SDR 01	1

MRP (₹) 68,320/-

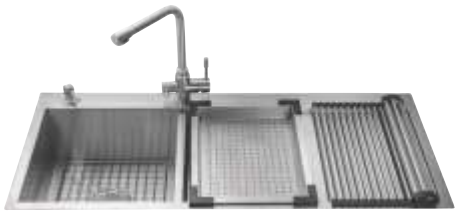

Cat Model No: COMBO - 12

Double Bowl Kitchen Sink With Drain Board

Cat Model:	JS 4520 R
Overall Size:	45 x 20 inch / 1145 x 510 mm
Bowl Sizes:	13 x 16 x 09 Inch / 340 x 400 x 225 mm 16 x 16 x 09 Inch / 400 x 400 x 225 mm
Finish:	Brush
Thickness:	1.2 mm

Included	Cat Model	Quantity
Kitchen Sink:	JS 4520 R	1
SS-304 Grade Faucet:	SF 05R	1
Wire Grid:	WG 01	1
Drainer Cap:	DC 01	2
Colander (2”):	JC 02	1
Soap Dispenser:	SDR 01	1
Roll Mate:	RMS 01	1

MRP (₹) 68,265/- Combo offer also applicable for JS 4520 L COMBO - 12A

Noble Square Series

Crafted from High Grade AISI-304 (18/8) - 18% Chrome, 8% Nickel in 1.0 mm thickness. Smart feature, excellent luster, maximum durability and strength 100% hygienic.

Features

- 1.0 mm thickness gives durability and longevity
- Unique satin finish
- Modern functional design
- International styling
- Advanced sound deadening technology
- Insect proof concentric coupling

AISI 304 18/8 STEEL | RUST PEOOF | LIFETIME WARRANTY | 100% Non-Magnetic | 145×215 Models Sizes

DIMENSIONS			MRP (₹)	OPTIONAL ACCESSORIES	
CAT. MODEL	Overall Size (inch/mm)	Bowl Size (inch/mm)		Wire Grid	Colander
JNS 1218	12 x 18 x 08 305 x 450 x 200	10 x 16 x 08 255 x 400 x 200	**6,440/-**	-	-

DIMENSIONS			MRP (₹)	OPTIONAL ACCESSORIES	
CAT. MODEL	Overall Size (inch/mm)	Bowl Size (inch/mm)		Wire Grid	Colander
JNS 1518	15x 18 x 08 380 x 450 x 200	13 x 16 x 08 330 x 400 x 200	**8,600/-**	-	JS 06
JNS 1616	16 x 16 x 08 400 x 400 x 200	14 x 14 x 08 350 x 350 x 200	**8,600/-**	-	-

DIMENSIONS			MRP (₹)	OPTIONAL ACCESSORIES	
CAT. MODEL	Overall Size (inch/mm)	Bowl Size (inch/mm)		Wire Grid	Colander
JNS 1816	18 x 16 x 08 450 x 400 x 200	16 x 14 x 08 400 x 350 x 200	**8,515/-**	WGN 01	JC 04 / JS 07A / JR 01
JNS 1918	19 x 18 x 08 480 x 450 x 200	17 x 16 x 08 430 x 400 x 200	**9,320/-**	-	JC 02 / JS 06 / JR 02
JNS 2118	21 x 18 x 09 530 x 450 x 225	19 x 16 x 09 480 x 400 x 225	**9,640/-**	WGN 02	JC 02 / JS 06 / JR 02
JNS 2418	24 x 18 x 09 610 x 450 x 225	21 x 16 x 09 550 x 400 x 225	**10,865/-**	WGN 03	JC 02
JNS 2420	24 x 20 x 09 610 x 508 x 225	21 x 18 x 09 550 x 450 x 225	**11,885/-**	-	JC 01 / JS 05 / JR 03
JNS 3018	30 x 18 x 09 762 x 450 x 225	27 x 16 x 09 700 x 400 x 225	**15,385/-**	-	JC 02

DIMENSIONS			MRP (₹)	OPTIONAL ACCESSORIES	
CAT. MODEL	Overall Size (inch/mm)	Bowl Size (inch/mm)		Wire Grid	Colander
JNS 1719T (Bar Sink)	17 x 19 x 08 430 x 485 x 200	15 x 15 x 08 380 x 380 x 200	**9,990/-**	-	-
JNS 2420T	24 x 20 x 09 610 x 510 x 225	21 x 16 x 09 550 x 400 x 225	**13,080/-**	WGN 03	JC 02 / JS 06 / JR 02
JNS 3220T	32 x 20 x 09 810 x 510 x 225	29 x 16 x 09 750 x 400 x 225	**16,685/-**	-	JC 02 / JS 06 / JR 02

DIMENSIONS			MRP (₹)	OPTIONAL ACCESSORIES	
CAT. MODEL	Overall Size (inch/mm)	Bowl Size (inch/mm)		Wire Grid	Colander
JNS 3618	36 x 18 x 09 915 x 460 x 225	18 x 16 x 09 460 x 400 x 225	**15,140/-**	WGN 06	JC 02 / JS 06 / JR 02
JNS 3620	36 x 20 x 09 915 x 510 x 225	18 x 18 x 09 460 x 460 x 225	**16,685/-**	-	JC 01 / JS 05
JNS 4018	40 x 18 x 09 1000 x 460 x 225	20 x 16 x 09 510 x 400 x 225	**17,200/-**	-	JC 02 / JS 06 / JR 02
JNS 4520	**45 X 20 X 09 1145 X 510 X 225**	**22 X 18 X 09 560 X 460 X 225**	**20,860/-**		

DIMENSIONS			MRP (₹)	OPTIONAL ACCESSORIES	
CAT. MODEL	Overall Size (inch/mm)	Bowl Size (inch/mm)		Wire Grid	Colander
JNS 3620T	36 x 20 x 09 915 x 510 x 225	18 x 16 x 09 460 x 400 x 225	**18,025/-**	WGN 06	JC 02 / JS 06 / JR 02
JNS 4520T	**45 X 20 X 09 1145 X 510 X 225**	**22 X 16 X 09 560 X 400 X 225**	**22,555/-**		

DIMENSIONS				MRP (₹)	OPTIONAL ACCESSORIES	
CAT. MODEL	Overall Size (inch/mm)		Bowl Size (inch/mm)		Wire Grid	Colander
JNS 3718DB	37 x 18 x 09 940 x 460 x 225	1st Bowl 2nd Bowl	18 x 16 x 09 450 x 400 x 225 16 x 16 x 09 400 x 400 x 225	**20,095/-**	WGN 08	JC 02 / JS 06 / JR 02
JNS 4218DB	42 x 18 x 09 1070 x 460 x 225	1st Bowl 2nd Bowl	21 x 16 x 09 525 x 400 x 225 18 x 16 x 09 455 x 400 x 225	**22,645/-**	WGN 09	JC 02 / JS 06 / JR 02
JNS 4518DB	45 x 18 x 09 1145 x 460 x 225	1st Bowl 2nd Bowl	21 x 16 x 09 527 x 400 x 225 21 x 16 x 09 527 x 400 x 225	**23,640/-**	WGN 09	JC 02 / JS 06 / JR 02
JNS 4520DB	45 x 20 x 09 1145 x 510 x 225	1st Bowl 2nd Bowl	21 x 18 x 09 527 x 450 x 225 21 x 18 x 09 527 x 450 x 225	**24,580/-**	WGN 10	JC 01 / JS 05 / JR 03

DIMENSIONS				MRP (₹)	OPTIONAL ACCESSORIES	
CAT. MODEL	Overall Size (inch/mm)		Bowl Size (inch/mm)		Wire Grid	Colander
JNS 3520T DB	35 x 20 x 09 890 x 510 x 225	1st Bowl 2nd Bowl	16 x 16 x 09 400 x 400 x 225 16 x 16 x 09 400 x 400 x 225	**20,910/-**	WGN 05	JC 02 / JS 06 / JR 02
JNS 3720T DB	37 x 20 x 09 940 x 510 x 225	1st Bowl 2nd Bowl	18 x 16 x 09 450 x 400 x 225 16 x 16 x 09 400 x 400 x 225	**21,930/-**	WGN 08 / WGN 05	JC 02 / JS 06 / JR 02
JNS 4220T DB	42 x 20 x 09 1070 x 510 x 225	1st Bowl 2nd Bowl	21 x 16 x 09 527 x 400 x 225 18 x 16 x 09 450 x 400 x 225	**23,970/-**	WGN 09	JC 02 / JS 06 / JR 02
JNS 4520T DB	45 x 20 x 09 1145 x 510 x 225	1st Bowl 2nd Bowl	21 x 16 x 09 527 x 400 x 225 21 x 16 x 09 527 x 400 x 225	**26,010/-**	WGN 09	JC 02 / JS 06 / JR 02

DIMENSIONS				MRP (₹)	OPTIONAL ACCESSORIES	
CAT. MODEL	Overall Size (inch/mm)		Bowl Size (inch/mm)		Wire Grid	Colander
JNS 2420 D (Bar Sink)	24 x 20 x 09 610 x 510 x 225	1st Bowl	07 x 16 x 06 180 x 400 x 150	**17,395/-**	-	JC 02 / JS 06 / JR 02
		2nd Bowl	13 x 16 x 09 340 x 400 x 225			

DIMENSIONS				MRP (₹)	OPTIONAL ACCESSORIES	
CAT. MODEL	Overall Size (inch/mm)		Bowl Size (inch/mm)		Wire Grid	Colander
JNS 4618	46 x 18 x 09 1160 x 460 x 225	1st Bowl	16 x 16 x 09 400 x 400 x 225	**23,460/-**	WGN 05	JC 02 / JS 06 / JR 02
		2nd Bowl	14 x 16 x 09 350 x 400 x 225			
JNS 6120	61 x 20 x 09 1550 x 510 x 225	1st Bowl	18 x 17.7 x 09 460 x 450 x 225	**34,505/-**		
		2nd Bowl	18 x 17.7 x 09 460 x 450 x 225			

NEW

DIMENSIONS				MRP (₹)	OPTIONAL ACCESSORIES	
CAT. MODEL	Overall Size (inch/mm)		Bowl Size (inch/mm)		Wire Grid	Colander
JNS 4720T R	47 x 20 x 09 1200 x 510 x 225	1st Bowl	16 x 16 x 09 400 x 400 x 225	**26,265/-**	WGN 05	JC 02 / JS 06 / JR 02
		2nd Bowl	14 x 16 x 09 350 x 400 x 225			
JNS 4720T L	47 x 20 x 09 1200 x 510 x 225	1st Bowl	16 x 16 x 09 400 x 400 x 225	**26,265/-**	WGN 05	JC 02 / JS 06 / JR 02
		2nd Bowl	14 x 16 x 09 350 x 400 x 225			

OPTIONAL ACCESSORIES

Model: JC Series
Colander

Model: JS Series
Colander

Model: JR Series
Colander

Model: DC 01
Drainer Cap

Model: RMR 02
Roll Matt

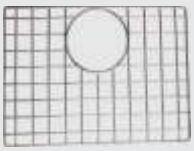

Model: WGN Series
Wire Grid

Model: WGN Series
Wire Grid

Model: WCB 06
Wooden Chopping Board

Model: SDR 01
Soap Dispenser

Model: SF 01
Faucet

Reference page no 50 & 51.

Regal Series

Sink with micro radius technology. Crafted from High Grade AISI-304 (18/8) - 18% Chrome, 8% Nickel in 1.0 mm thickness. Smart feature, excellent luster, maximum durability and strength 100% hygienic.

Features

- 1.0 mm thickness gives durability and longevity
- Unique satin finish
- Modern functional design
- International styling
- Advanced sound deadening technology
- Insect proof concentric coupling

AISI 304 18/8 STEEL | RUST PEOOF | LIFETIME WARRANTY | 100% Non-Magnetic | 1 Models 145×215 1 Sizes

DIMENSIONS			MRP (₹)	OPTIONAL ACCESSORIES	
CAT. MODEL	Overall Size (inch/mm)	Bowl Size (inch/mm)		Wire Grid	Colander
JNRS 1816	18 x 16 x 08 450 x 400 x 200	16 x 14 x 08 400 x 350 x 200	**9,425/-**	WGN 01	JC 04 / JS 07A / JR 01
JNRS 2118	21 x 18 x 09 530 x 450 x 225	19 x 16 x 09 480 x 400 x 225	**10,560/-**	WGN 02	JC 02 / JS 06 / JR 02
JNRS 2418	24 x 18 x 09 610 x 460 x 225	21 x 16 x 09 550 x 400 x 225	**11,935/-**	WGN 03	JC 02 / JS 06 / JR 02

DIMENSIONS			MRP (₹)	OPTIONAL ACCESSORIES	
CAT. MODEL	Overall Size (inch/mm)	Bowl Size (inch/mm)	Glossy	Wire Grid	Colander
JNRS 2420T	24 x 20 x 09 610 x 510 x 225	21 x 16 x 09 550 x 400 x 225	**14,180/-**	WGN 03	JC 02 / JS 06 / JR 02

DIMENSIONS			MRP (₹)	OPTIONAL ACCESSORIES	
CAT. MODEL	Overall Size (inch/mm)	Bowl Size (inch/mm)		Wire Grid	Colander
JNRS 4520T DB	45 x 20 x 09 1145 x 510 x 225	1st Bowl 21 x 16 x 09 527 x 400 x 225 2nd Bowl 21 x 16 x 09 527 x 400 x 225	**29,070/-**	WGN 09	JC 02 / JS 06 / JR 02

DIMENSIONS			MRP (₹)	OPTIONAL ACCESSORIES	
CAT. MODEL	Overall Size (inch/mm)	Bowl Size (inch/mm)		Wire Grid	Colander
JNRS 3718DB	37 x 18 x 09 940 x 460 x 225	1st Bowl 18 x 16 x 09 450 x 400 x 225 2nd Bowl 16 x 16 x 09 400 x 400 x 225	**22,340/-**	WGN 08	JC 02 / JS 06 / JR 02
JNRS 4218DB	42 x 18 x 09 1070 x 460 x 225	1st Bowl 21 x 16 x 09 525 x 400 x 225 2nd Bowl 18 x 16 x 09 455 x 400 x 225	**24,890/-**	WGN 09	JC 02 / JS 06 / JR 02
JNRS 4518 DB	45 x 18 x 09 1145 x 460 x 225	1st Bowl 21 x 16 x 09 527 x 400 x 225 2nd Bowl 21 x 16 x 09 527 x 400 x 225	**27,030/-**	WGN 09	JC 02 / JS 06 / JR 02

OPTIONAL ACCESSORIES

Model: JC Series
Colander

Model: JS Series
Colander

Model: JR Series
Colander

Model: DC 01
Drainer Cap

Model: RMR 02
Roll Matt

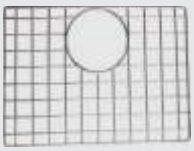

Model: WGN Series
Wire Grid

Model: WGN Series
Wire Grid

Model: WCB 06
Wooden Chopping Board

Model: SF 05 R
Faucet

Reference page no 50 & 51

Featuring Sink (top):
JS 4520 R
(1160 x 510 x 225 mm)

Square Series

In today's hectic world, people yearn more and more for tranquility and simplicity. Jayna focuses on the basics: the enjoyment of your time in kitchen. There are no distractions. Behold a collection that will never go out of fashion. Surrender to happiness unbounded...

Features

- 1.2 mm thickness gives durability and longevity
- Unique brushed/satin finish
- Modern functional design
- International styling
- Advanced sound deadening technology
- Insect proof concentric coupling

AISI 304 18/8 STEEL | RUST PROOF | LIFETIME WARRANTY | 100% Non-Magnetic | 14 Models 5 Sizes 215

DIMENSIONS				OPTIONAL ACCESSORIES	
CAT. MODEL	Overall Size (inch/mm)	Bowl Size (inch/mm)	Cabinet Size	Wire Grid	Colander
JS 1820 (Bar Sink)	18 x 20 x 09 460 x 510 x 225	16 x 16 x 09 400 x 400 x 225	45 cm	WG 01	JC 02 / JS 06 / JR 02
MRP (₹)	**16,180/-**				

DIMENSIONS				OPTIONAL ACCESSORIES	
CAT. MODEL	Overall Size (inch/mm)	Bowl Size (inch/mm)	Cabinet Size	Wire Grid	Colander
JS 2418	24 x 18 x 09 610 x 460 x 225	22 x 16 x 09 550 x 400 x 225	60 cm	WG 02	JC 02 / JS 06 / JR 02
MRP (₹)	**20,585/-**				

DIMENSIONS				OPTIONAL ACCESSORIES	
CAT. MODEL	Overall Size (inch/mm)	Bowl Size (inch/mm)	Cabinet Size	Wire Grid	Colander
JS 2420	24 x 20 x 09 610 x 510 x 225	22 x 16 x 09 550 x 400 x 225	60 cm	WG 02	JC 02 / JS 06 / JR 02
MRP (₹)	**22,770/-**	Accessories Included: Soap Dispenser			

DIMENSIONS				OPTIONAL ACCESSORIES	
CAT. MODEL	Overall Size (inch/mm)	Bowl Size (inch/mm)	Cabinet Size	Wire Grid	Colander
JS 3020	30 x 20 x 09 760 x 510 x 225	27.5 x 15 x 09 700 x 400 x 225	75 cm	-	JC 02 / JS 06 / JR 02
MRP (₹)	**25,920/-**	Accessories Included: Soap Dispenser			

DIMENSIONS				OPTIONAL ACCESSORIES	
CAT. MODEL	Overall Size (inch/mm)	Bowl Size (inch/mm)	Cabinet Size	Wire Grid	Colander
JS 3218	32 x 18 x 09 810 x 460 x 225	30 x 16 x 09 750 x 400 x 225	80 cm	-	JC 02 / JS 06 / JR 02
MRP (₹)	**23,980/-**				

DIMENSIONS				OPTIONAL ACCESSORIES	
CAT. MODEL	Overall Size (inch/mm)	Bowl Size (inch/mm)	Cabinet Size	Wire Grid	Colander
JS 3418 D	34 x 18 x 09 865 x 460 x 225	1st Bowl 14 x 16 x 09 380 x 400 x 225 2nd Bowl 16 x 16 x 09 400 x 400 x 225	90 cm	WG 01	JC 02 / JS 06 / JR 02
MRP (₹)	**30,630/-**				

DIMENSIONS					OPTIONAL ACCESSORIES	
CAT. MODEL	Overall Size (inch/mm)	Bowl Size (inch/mm)		Cabinet Size	Wire Grid	Colander
JS 4520 D	45 x 20 x 09 1145 x 510 x 225	1st Bowl	21 x 16 x 09 530 x 400 x 225	120 cm	WG 02A	JC 02 / JS 06 / JR 02
		2nd Bowl	21 x 16 x 09 530 x 400 x 225			
MRP (₹)	**42,275/-**		Accessories Included: Soap Dispenser			

DIMENSIONS				OPTIONAL ACCESSORIES	
CAT. MODEL	Overall Size (inch/mm)	Bowl Size (inch/mm)	Cabinet Size	Wire Grid	Colander
JS 3120 R	31 x 20 x 09 780 x 510 x 225	13 x 16 x 09 340 x 400 x 225	40 cm	WG 04	JC 02 / JS 06 / JR 02
MRP (₹)	**26,840/-**	Accessories Included: Soap Dispenser			

DIMENSIONS				OPTIONAL ACCESSORIES	
CAT. MODEL	Overall Size (inch/mm)	Bowl Size (inch/mm)	Cabinet Size	Wire Grid	Colander
JS 3120 L	31 x 20 x 09 780 x 510 x 225	13 x 16 x 09 340 x 400 x 225	40 cm	WG 04	JC 02 / JS 06 / JR 02
MRP (₹)	**26,840/-**	Accessories Included: Soap Dispenser			

DIMENSIONS				OPTIONAL ACCESSORIES	
CAT. MODEL	Overall Size (inch/mm)	Bowl Size (inch/mm)	Cabinet Size	Wire Grid	Colander
JS 3720	37 x 20 x 09 940 x 510 x 225	18 x 18 x 09 450 x 450 x 225	50 cm	-	JC 01 / JS 05 / JR 03
MRP (₹)	**23,980/-**				

DIMENSIONS					OPTIONAL ACCESSORIES	
CAT. MODEL	Overall Size (inch/mm)	Bowl Size (inch/mm)		Cabinet Size	Wire Grid	Colander
JS 4018 M	39.5 x 18 x 09 1000 x 460 x 225	1st Bowl	16 x 16 x 09 400 x 400 x 225	75 cm	WG 01	JC 02 / JS 06 / JR 02
		2nd Bowl	07 x 16 x 06 180 x 400 x 150			
MRP (₹)	**33,670/-**					

DIMENSIONS					OPTIONAL ACCESSORIES	
CAT. MODEL	Overall Size (inch/mm)	Bowl Size (inch/mm)		Cabinet Size	Wire Grid	Colander
JS 4020 MR	40 x 20 x 09 1000 x 510 x 225	1st Bowl	16 x 16 x 09 400 x 400 x 225	75 cm	WG 01	JC 02 / JS 06 / JR 02
		2nd Bowl	07 x 16 x 06 180 x 400 x 150			
MRP (₹)	**38,275/-**		Accessories Included: Soap Dispenser			

DIMENSIONS					OPTIONAL ACCESSORIES	
CAT. MODEL	Overall Size (inch/mm)	Bowl Size (inch/mm)		Cabinet Size	Wire Grid	Colander
JS 4020 ML	40 x 20 x 09 1000 x 510 x 225	1st Bowl	07 x 16 x 06 180 x 410 x 150	75 cm	-	JC 02 / JS 06 / JR 02
		2nd Bowl	16 x 16 x 09 400 x 400 x 225		WG 01	
MRP (₹)	**38,275/-**		Accessories Included: Soap Dispenser			

DIMENSIONS					OPTIONAL ACCESSORIES	
CAT. MODEL	Overall Size (inch/mm)		Bowl Size (inch/mm)	Cabinet Size	Wire Grid	Colander
JS 4520 R	45 x 20 x 09 1160 x 510 x 225	1st Bowl	16 x 16 x 09 400 x 400 x 225	50 cm	WG 01	JC 02 / JS 06 / JR 02
		2nd Bowl	13 x 16 x 09 340 x 400 x 225		WG 04	
MRP (₹)	**42,830/-**		Accessories Included: Soap Dispenser			

DIMENSIONS					OPTIONAL ACCESSORIES	
CAT. MODEL	Overall Size (inch/mm)		Bowl Size (inch/mm)	Cabinet Size	Wire Grid	Colander
JS 4520 L	45 x 20 x 09 1160 x 510 x 225	1st Bowl	13 x 16 x 09 340 x 400 x 225	90 cm	WG 04	JC 02 / JS 06 / JR 02
		2nd Bowl	16 x 16 x 09 400 x 400 x 225		WG 01	
MRP (₹)	**42,830/-**		Accessories Included: Soap Dispenser			

PRODUCT DESCRIPTION & DIMENSIONS		
CAT. MODEL	Features / Size	MRP (₹)
JS 1717 WB (With Stand)	17 x 17 430 x 430	**26,945/-**

*Faucet price not included in M.R.P.
Wash Basin in 3 mm thickness

OPTIONAL ACCESSORIES

Model: JC Series
Colander

Model: JS Series
Colander

Model: JR Series
Colander

Model: DC 01
Drainer Cap

Model: RMR 02
Roll Matt

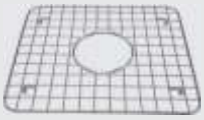

Model: WG Series
Wire Grid

Model: SDR 01
Soap Dispenser

Model: WCB 06
Wooden Chopping Board

Model: SF 08 F
RO Faucet

Model: SF 01
Faucet

Reference page no 50 & 51

Square R-10 Series

JAYNA- SQUARE R-10 SERIES Crafted from High Grade AISI-304 (18/8) - 18% Chrome, 8% Nickel in 1.2 (mm) thickness. Smart Feature, excellent luster, maximum durability and strength. 10 mm radius corners for easier cleaning. 100% Hygienic.

Features

- 1.2 mm** thickness gives durability and longevity
- Unique brushed
- Modern functional design
- International styling
- Advanced sound deadening technology
- Insect proof concentric coupling

AISI 304 18/8 STEEL | RUST PEOOF | LIFETIME WARRANTY | 100% Non-Magnetic | 145×215 Models Sizes

DIMENSIONS				OPTIONAL ACCESSORIES	
CAT. MODEL	Overall Size (inch/mm)	Bowl Size (inch/mm)	Cabinet Size	Wire Grid	Colander
JS RC - 2418	24 x 18 x 09 610 x 460 x 225	22 x 16 x 09 560 x 400 x 225	60 cm	WGN 03	JC 02 / JS 06 / JR 02
MRP (₹)	**21,125/-**				

DIMENSIONS				OPTIONAL ACCESSORIES	
CAT. MODEL	Overall Size (inch/mm)	Bowl Size (inch/mm)	Cabinet Size	Wire Grid	Colander
JS RC - 2420	24 x 20 x 09 610 x 510 x 225	22 x 16 x 09 550 x 400 x 225	60 cm	WGN 03	JC 02 / JS 06 / JR 02
MRP (₹)	**23,450/-**	Accessories Included: Soap Dispenser			

DIMENSIONS				OPTIONAL ACCESSORIES	
CAT. MODEL	Overall Size (inch/mm)	Bowl Size (inch/mm)	Cabinet Size	Wire Grid	Colander
JS RC - 3418D	34 x 18 x 09 860 x 460 x 225	1st Bowl 14 x 16 x 09 380 x 400 x 225 2nd Bowl 16 x 16 x 09 400 x 400 x 225	90 cm	WGN 05	JC 02 / JS 06 / JR 02
MRP (₹)	**32,170/-**				

DIMENSIONS				OPTIONAL ACCESSORIES	
CAT. MODEL	Overall Size (inch/mm)	Bowl Size (inch/mm)	Cabinet Size	Wire Grid	Colander
JS RC - 4520D	45 x 20 x 09 1145 x 510 x 225	1st Bowl 21 x 16 x 09 530 x 400 x 225 2nd Bowl 21 x 16 x 09 530 x 400 x 225	120 cm	WGN 09	JC 02 / JS 06 / JR 02
MRP (₹)	**43,800/-**	Accessories Included: Soap Dispenser			

OPTIONAL ACCESSORIES

Model: JC Series
Colander

Model: JS Series
Colander

Model: JR Series
Colander

Model: DC 01
Drainer Cap

Model: RMR 02
Roll Matt

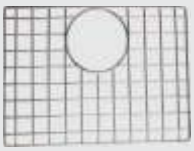

Model: WGN Series
Wire Grid

Model: WGN Series
Wire Grid

Model: WCB 06
Wooden Chopping Board

Model: SDR 01
Soap Dispenser

Model: SF 05 R
Faucet

Reference page no 50 & 51

AISI 304 18/8 STEEL | RUST PROOF | LIFETIME WARRANTY | 100% Non-Magnetic | 14 Models | 5 Sizes

Featuring Sink (top):
Designo Series
JD 4620 L (1160 x 500 x 215 mm)

Designo Series

In today's hectic world, people yearn more and more for tranquility and simplicity. Jayna focuses on the basics: the enjoyment of your time in kitchen. There are no distractions. Behold a collection that will never go out of fashion. Surrender to obsession unlimited...

Features

- 1.0 mm** thickness gives durability and longevity
- Satin finish
- Modern functional design
- International styling
- Advanced sound deadening technology
- Insect proof concentric coupling

DIMENSIONS					OPTIONAL ACCESSORIES	
CAT. MODEL	Overall Size (inch/mm)		Bowl Size (inch/mm)	Cabinet Size	Wire Grid	Colander
JD 2720	27 x 19 x 08 680 x 490 x 210		24 x 15 x 08 620 x 375 x 210	80 cm	-	-
MRP (₹)	**21,245/-**		Accessories Included: Soap Dispenser			

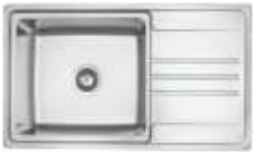

DIMENSIONS					OPTIONAL ACCESSORIES	
CAT. MODEL	Overall Size (inch/mm)		Bowl Size (inch/mm)	Cabinet Size	Wire Grid	Colander
JD 3420 R	34 x 20 x 8.5 860 x 500 x 215		18 x 16 x 8.5 450 x 400 x 215	80 cm	WG 06	JC 02 / JS 06 / JR 02
MRP (₹)	**21,495/-**		Accessories Included: Soap Dispenser			

DIMENSIONS					OPTIONAL ACCESSORIES	
CAT. MODEL	Overall Size (inch/mm)		Bowl Size (inch/mm)	Cabinet Size	Wire Grid	Colander
JD 3420 L	34 x 20 x 8.5 860 x 500 x 215		18 x 16 x 8.5 450 x 400 x 215	80 cm	WG 06	JC 02 / JS 06 / JR 02
MRP (₹)	**21,495/-**		Accessories Included: Soap Dispenser			

DIMENSIONS					OPTIONAL ACCESSORIES	
CAT. MODEL	Overall Size (inch/mm)		Bowl Size (inch/mm)	Cabinet Size	Wire Grid	Colander
JD 3420 DB	34 x 20 x 8.5 860 x 500 x 215	1st Bowl	14 x 16 x 8.5 350 x 400 x 215	80 cm	WG 04	JC 02 / JS 06 / JR 02
		2nd Bowl	16 x 14 x 8.5 400 x 350 x 215			
MRP (₹)	**26,900/-**		Accessories Included: Soap Dispenser			

DIMENSIONS					OPTIONAL ACCESSORIES	
CAT. MODEL	Overall Size (inch/mm)		Bowl Size (inch/mm)	Cabinet Size	Wire Grid	Colander
JD 4020 MR	40 x 20 x 8.5 1000 x 500 x 215	1st Bowl	14 x 16 x 8.5 350 x 400 x 215	60 cm	WG 04	JC 02 / JS 06 / JR 02
		2nd Bowl	07 x 12 x 5.5 180 x 300 x 135			
MRP (₹)	**25,430/-**		Accessories Included: Soap Dispenser			

DIMENSIONS					OPTIONAL ACCESSORIES	
CAT. MODEL	Overall Size (inch/mm)		Bowl Size (inch/mm)	Cabinet Size	Wire Grid	Colander
JD 4020 ML	40 x 20 x 8.5 1000 x 500 x 215	1st Bowl	07 x 12 x 5.5 180 x 300 x 135	60 cm	WG 04	JC 02 / JS 06 / JR 02
		2nd Bowl	14 x 16 x 8.5 350 x 400 x 215			
MRP (₹)	**25,430/-**		Accessories Included: Soap Dispenser			

DIMENSIONS					OPTIONAL ACCESSORIES	
CAT. MODEL	Overall Size (inch/mm)		Bowl Size (inch/mm)	Cabinet Size	Wire Grid	Colander
JD 4620 R	46 x 20 x 8.5 1160 x 500 x 215	1st Bowl	14 x 16 x 8.5 350 x 400 x 215	80 cm	WG 04	JC 02 / JS 06 / JR 02
		2nd Bowl	16 x 14 x 8.5 400 x 350 x 215			
MRP (₹)	**30,460/-**		Accessories Included: Soap Dispenser			

DIMENSIONS					OPTIONAL ACCESSORIES	
CAT. MODEL	Overall Size (inch/mm)		Bowl Size (inch/mm)	Cabinet Size	Wire Grid	Colander
JD 4620 L	46 x 20 x 8.5 1160 x 500 x 215	1st Bowl	16 x 14 x 8.5 400 x 350 x 215	80 cm	WG 04	JC 02 / JS 06 / JR 02
		2nd Bowl	14 x 16 x 8.5 350 x 400 x 215			
MRP (₹)	**30,460/-**		Accessories Included: Soap Dispenser			

DIMENSIONS			
CAT. MODEL	Overall Size (inch/mm)	Bowl Size (inch/mm)	Cabinet Size
JI 3419	33 x 19 x 08 850 x 480 x 210	30 x 16 x 08 765 x 400 x 210	80 cm
MRP (₹)	**20,085/-**		

ACCESSORIES INCLUDED : WOODEN CHOPPING BOARD, SOAP DISPENSER

Faucet shown is not part of sink

DIMENSIONS			
CAT. MODEL	Overall Size (inch/mm)	Bowl Size (inch/mm)	Cabinet Size
JI 4420 D	44 x 20 x 08 1130 x 520 x 205	Ø 17 Ø 425	100 cm
MRP (₹)	**21,380/-**		

ACCESSORIES INCLUDED : SOAP DISPENSER

Faucet shown is not part of sink

DIMENSIONS				
CAT. MODEL	Overall Size (inch/mm)		Bowl Size (inch/mm)	Cabinet Size
JI 3919	38.5 x 19 x 08 980 x 480 x 210	1st Bowl	10 x 13 x 08 260 x 340 x 210	80 cm
		2nd Bowl	15 x 13 x 08 380 x 330 x 210	
MRP (₹)	**20,075/-**			

ACCESSORIES INCLUDED : WOODEN CHOPPING BOARD, SOAP DISPENSER

DIMENSIONS				
CAT. MODEL	Overall Size (inch/mm)		Bowl Size (inch/mm)	Cabinet Size
JI 4520 R	45.5 x 20 x 08 1160 x 510 x 225	1st Bowl	14 x 16 x 08 347 x 405 x 210	80 cm
		2nd Bowl	13 x 14 x 08 330 x 352 x 210	
MRP (₹)	**22,800/-**			

ACCESSORIES INCLUDED : WOODEN CHOPPING BOARD, SOAP DISPENSER

DIMENSIONS				
CAT. MODEL	Overall Size (inch/mm)		Bowl Size (inch/mm)	Cabinet Size
JI 4520 L	45.5 x 20 x 08 1160 x 510 x 225	1st Bowl	13 x 14 x 08 330 x 352 x 210	80 cm
		2nd Bowl	14 x 16 x 08 347 x 405 x 210	
MRP (₹)	**22,800/-**			

ACCESSORIES INCLUDED : WOODEN CHOPPING BOARD, SOAP DISPENSER

DIMENSIONS				
CAT. MODEL	Overall Size (inch/mm)		Bowl Size (inch/mm)	Cabinet Size
AU 3420	34 x 20 x 09 850 x 510 x 220		17.5 x 17 x 09 445 x 425 x 220	80 cm
MRP (₹)	**20,870/-**			

DIMENSIONS				
CAT. MODEL	Overall Size (inch/mm)		Bowl Size (inch/mm)	Cabinet Size
AU 4520	45.5 x 20 x 08 1160 x 500 x 205	1st Bowl	13 x 16 x 08 340 x 400 x 205	80 cm
		2nd Bowl	13 x 16 x 08 340 x 400 x 205	
MRP (₹)	**24,765/-**			

DIMENSIONS				
CAT. MODEL	Overall Size (inch/mm)		Bowl Size (inch/mm)	Cabinet Size
AU 4620	45.5 x 20 x 08 1160 x 500 x 205	1st Bowl	11 x 17 x 08 285 x 435 x 205	80 cm
		2nd Bowl	16.5 x 17 x 08 425 x 435 x 205	
MRP (₹)	**24,765/-**			

OPTIONAL ACCESSORIES

Model: JC Series
Colander

Model: JS Series
Colander

Model: DC 01
Drainer Cap

Model: RMR 02
Roll Matt

Stainless Steel
Crockery Basket

Soap Dispenser

Model: WCB 06
Wooden Chopping Board

Model: SF 01
Faucet

Roll Matt: Square		
CAT. MODEL	Size (mm)	**MRP (₹)**
RMS 01	440 x 440 mm	**3,875/-**

Roll Matt: Round		
CAT. MODEL	Size (mm)	**MRP (₹)**
RMR 02	440 x 440 mm	**3,325/-**

Stainless Steel Drainer Cap		
CAT. MODEL	Size (mm)	**MRP (₹)**
DC 01	Ø 114	**745/-**

COLANDER (2”): Used for washing cutlery or cleaning food items.

DIMENSIONS			MRP (₹)
CAT. MODEL	Overall Size (inch/mm)	Inner Size (inch/mm)	
JC 01	325 x 475 x 50	285 x 435 x 50	**4,050/-**
JC 02	325 x 420 x 50	285 x 380 x 50	**3,835/-**
JC 04	325 x 370 x 50	285 x 330 x 50	**3,510/-**

COLANDER (5”): Used for washing cutlery or cleaning food items.

DIMENSIONS			MRP (₹)
CAT. MODEL	Overall Size (inch/mm)	Inner Size (inch/mm)	
JS 05	220 x 475 x 125	180 x 435 x 125	**4,480/-**
JS 06	220 x 420 x 125	180 x 380 x 125	**4,160/-**
JS 07A	220 x 370 x 125	180 x 330 x 125	**3,780/-**

COLANDER (2”): Used for washing cutlery or cleaning food items.

DIMENSIONS			MRP (₹)
CAT. MODEL	Overall Size (inch/mm)	Inner Size (inch/mm)	
JR 01	250 x 390 x 75	250 x 310 x 75	**3,780/-**
JR 02	250 x 440 x 75	250 x 360 x 75	**4,160/-**
JR 03	250 x 490 x 75	250 x 410 x 75	**4,590/-**

Stainless Steel Trayse: A low depth tray which look like a Drain Board & works like colander for the sink area used for washing or other items.

DIMENSIONS		MRP (₹)
CAT. MODEL	Size (mm)	Glossy
SST 01	380 x 460 x 30	**7,430/-**
SST 02	380 x 510 x 30	**8,720/-**

SST 01 & SST 02 are 30 mm deep trays which are most appropriate when placed with the single or double bowl sink to create a deeper and more convenient drainboard.

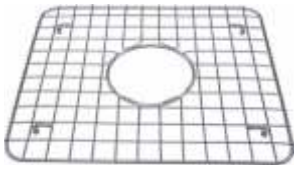

WIRE GRID WITH CENTER POSITION DRAINER		
	DIMENSIONS	MRP (₹)
CAT. MODEL	Size (mm)	
WG 01	390 X 390	**1,945/-**
WG 02	540 X 390	**2,700/-**
WG 02A	520 X 390	**2,700/-**
WG 04	330 x 390	**1,945/-**
WG 05	370 x 320	**1,945/-**
WG 06	440 x 390	**2,375/-**

SOAP DISPENSERS ROUND		
CAT. MODEL	Suitable for	MRP (₹)
SDR 01	Designo Sinks	**1,730/-**

SOAP DISPENSERS ROUND
For a convenient access to the soap for washing hands or utensils to maintain a hygienic work environment.

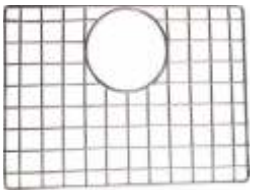

WIRE GRID WITH REAR POSITION DRAINER		
	DIMENSIONS	MRP (₹)
CAT. MODEL	Size (mm)	
WGN 01	390 X 340	**1,945/-**
WGN 02	470 X 390	**2,700/-**
WGN 03	540 X 390	**2,700/-**

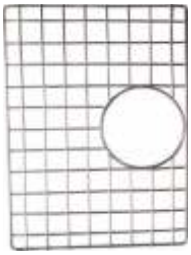

WIRE GRID WITH REAR POSITION DRAINER		
	DIMENSIONS	MRP (₹)
CAT. MODEL	Size (mm)	
WGN 05	390 X 390	**1,945/-**
WGN 06	450 X 390	**2,700/-**
WGN 07	450 X 440	**2,700/-**
WGN 08	440 X 390	**2,700/-**
WGN 09	517 X 390	**3,025/-**
WGN 10	517 X 440	**3,240/-**

WOODEN CHOPPING BOARD

CHOPPING BOARDS			
Description	CAT. MODEL	Outer Size (mm)	MRP (₹)
WOODEN CHOPPING BOARD	WCB 06	387 x 355	**1,375/-**

KITCHEN FAUCETS

Featuring Tap:
Cat. Model - BF 06R
Single Lever kitchen pullout mixer with RO/drinking water connection

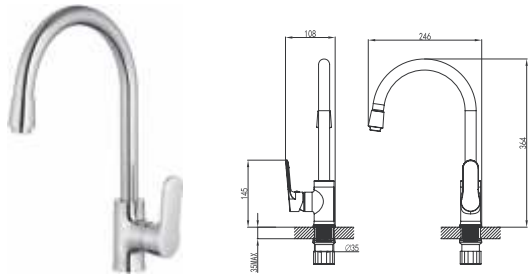

CAT. MODEL	MRP (₹)
BF O1	4,550
FINISH	CHROME

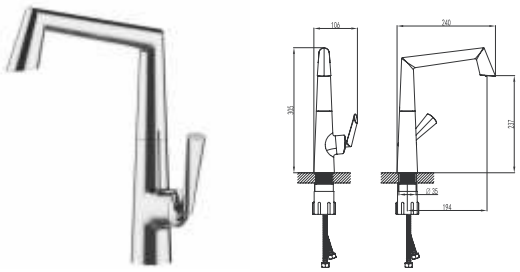

CAT. MODEL	MRP (₹)
BF O2	11,600
FINISH	CHROME

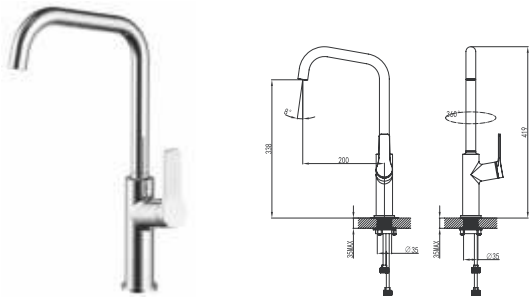

CAT. MODEL	MRP (₹)
BF O3	10,600
FINISH	CHROME

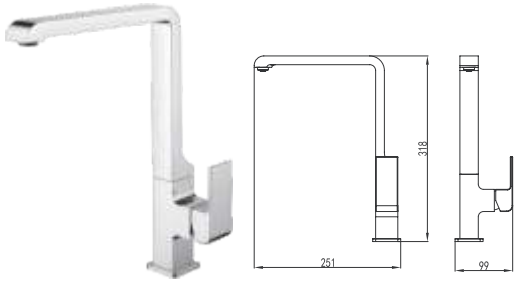

CAT. MODEL	MRP (₹)
BF O4	15,400
FINISH	CHROME

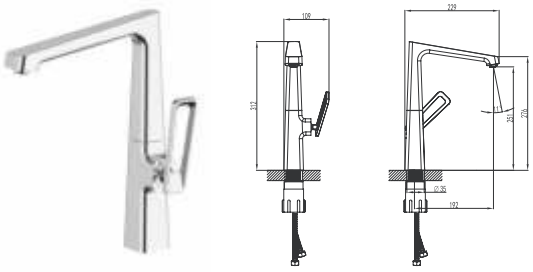

CAT. MODEL	MRP (₹)
BF O5	14,500
FINISH	CHROME

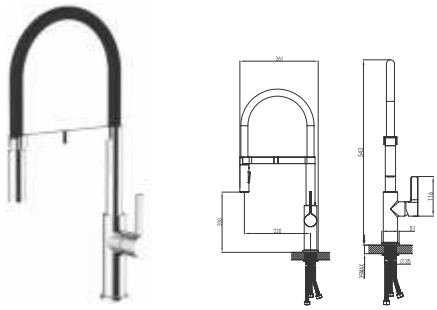

CAT. MODEL	MRP (₹)
BF O6R	12,100
FINISH	CHROME

∴ Pullout Mixer with RO Filter Water

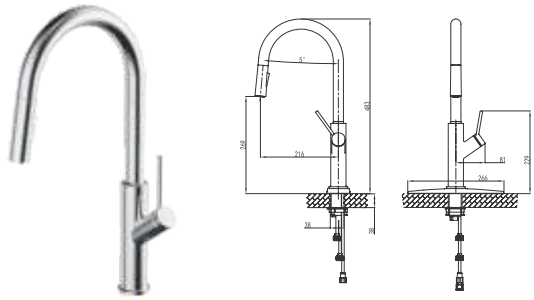

CAT. MODEL	MRP (₹)
BF O7P	12,500
FINISH	CHROME

∴ Pullout Mixer

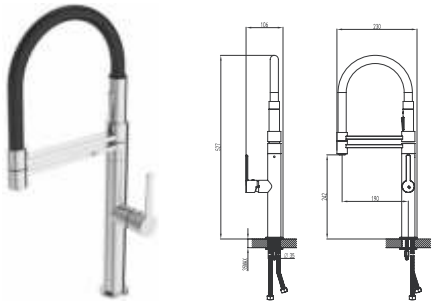

CAT. MODEL	MRP (₹)
BF O8P	18,900
FINISH	CHROME

∴ Pullout Mixer

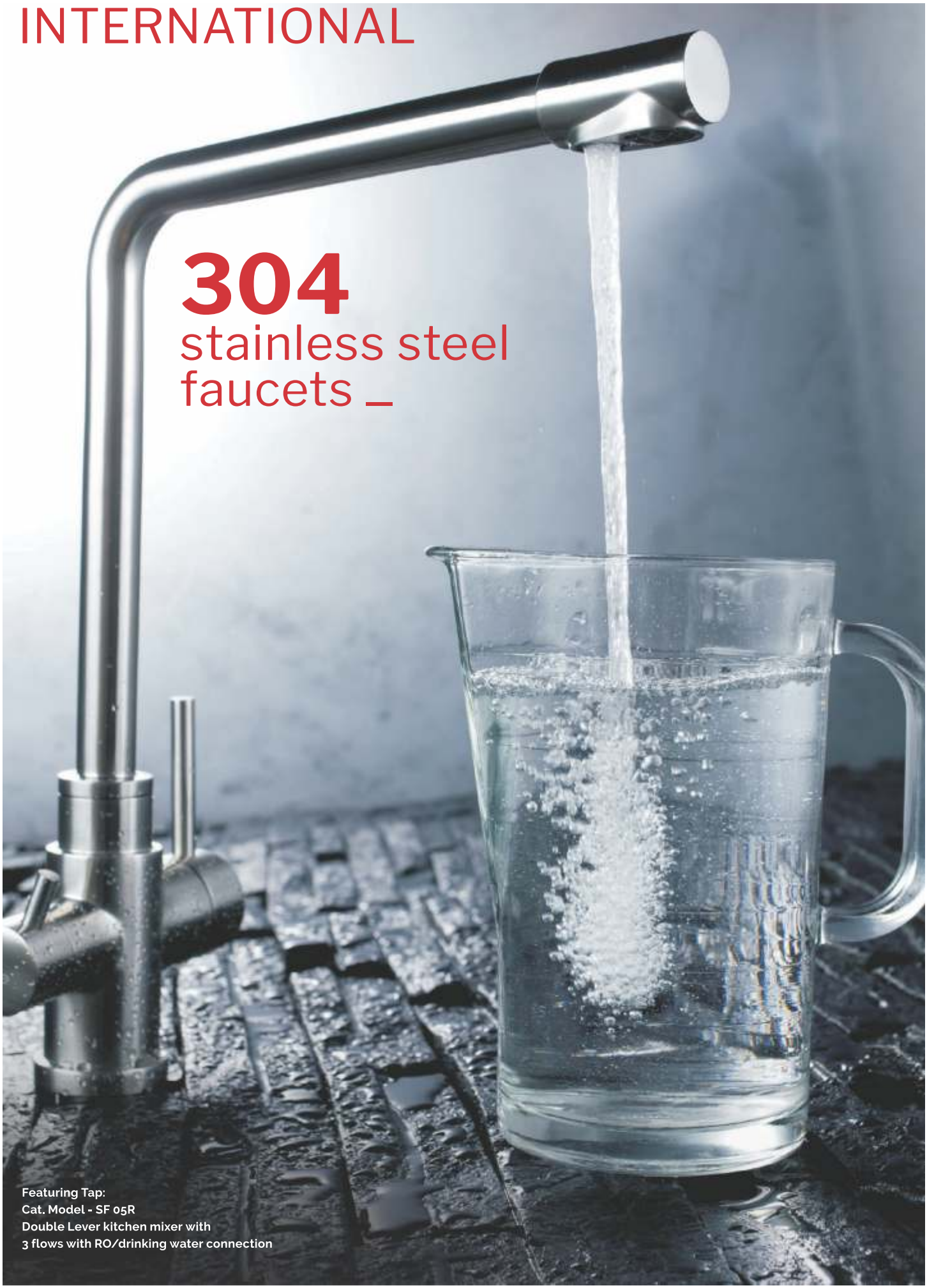

304
stainless steel faucets _

Featuring Tap:
Cat. Model - SF 05R
Double Lever kitchen mixer with
3 flows with RO/drinking water connection

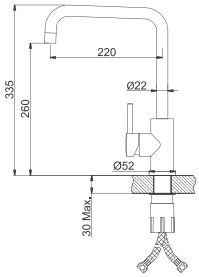

CAT. MODEL	MRP (₹)
SF O1	**9,620/-**
FINISH	**SATIN FINISH**

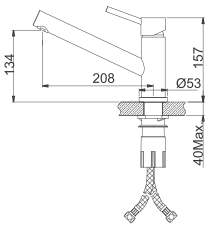

CAT. MODEL	MRP (₹)
SF O2	**10,615/-**
FINISH	**SATIN FINISH**

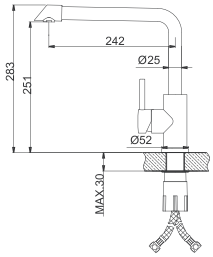

CAT. MODEL	MRP (₹)
SF O3	**12,010/-**
FINISH	**SATIN FINISH**

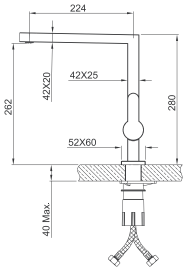

CAT. MODEL	MRP (₹)
SF O4	**17,990/-**
FINISH	**SATIN FINISH**

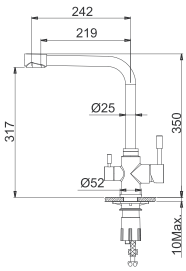

CAT. MODEL	MRP (₹)
SF O5R	**21,050/-**
FINISH	**SATIN FINISH**

Orientable spout with 2 internal speparated pipes. Right handle for standard mixers, left handle for RO/Drinking Water.

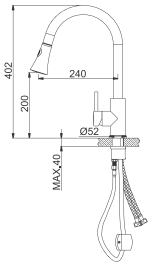

CAT. MODEL	MRP (₹)
SF O6P	**21,050/-**
FINISH	**SATIN FINISH**

∴ **Pullout Mixer**

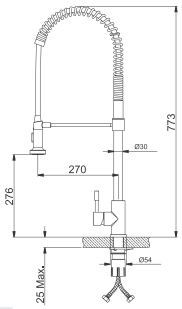

CAT. MODEL	MRP (₹)
SF O7P	**27,030/-**
FINISH	**SATIN FINISH**

∴ **Pullout Mixer**

Filter Faucet For RO/Drinking Water

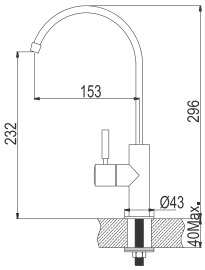

CAT. MODEL	MRP (₹)
SF O8F	**6,530/-**
FINISH	**SATIN FINISH**

SMARTSERIES LINEARSHOWER CHANNEL

Jayna Shower Channel

A Linear Shower channel is a must for absolutely every bathroom. Due to its unique anti-odour design, low installation height, high flow rate and wide assortment of stainless steel grids, it meets requirements of demanding clients - and is an ideal solution for your bathroom.

The bottom part is made from polypropylene, the drain frame and the cover grid are made from stainless steel 304 Grade, allowing for a K3 load (up to 300 kg). The minimum installation height is 65mm, the drain is height-adjustable. To connect to sewage pipes Ø 40/50mm. The package includes a self-adhesive waterproo fing membrane, adjustable spacers, nylon plugs, a plastic key to remove the stainless steel grid and the assembly instructions.

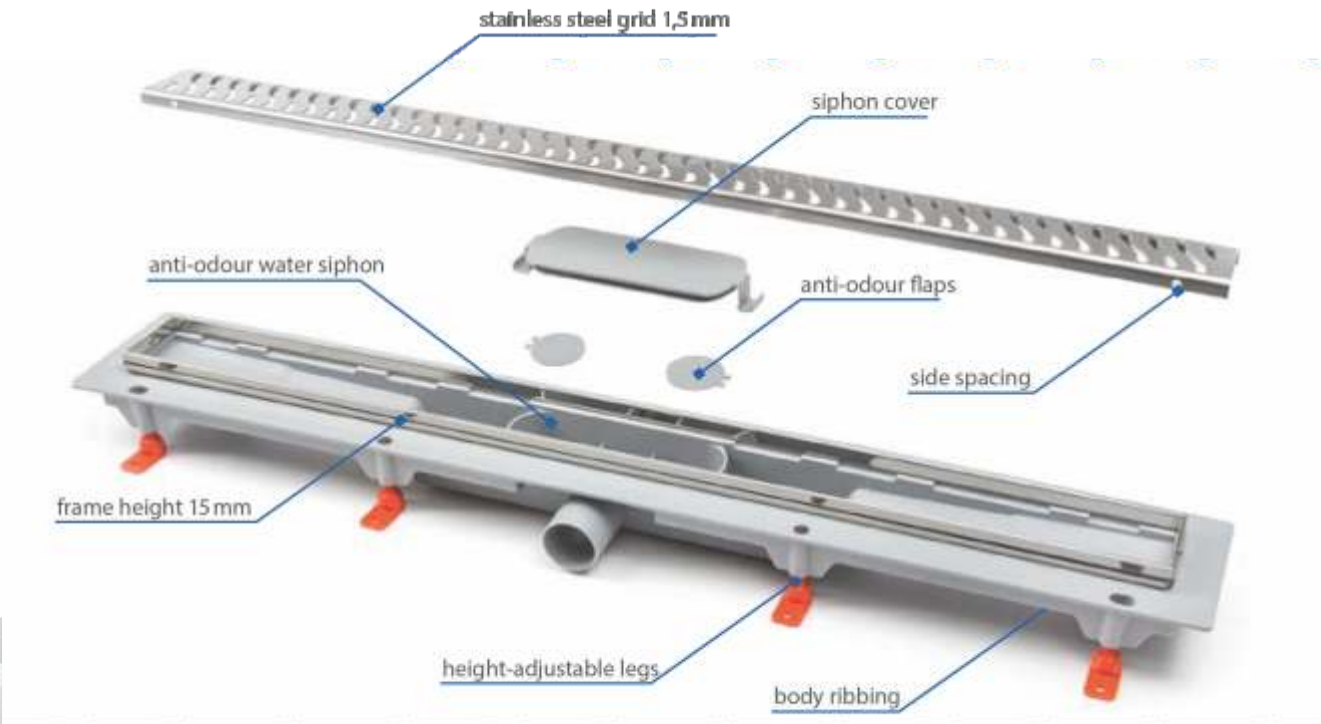

BENEFITS

- Low installation height 65mm
- Drain frame height 15mm
- Drain height adjustment between 65 - 125mm
- Flow rate 30 - 70 l/min
- Combined siphon: water level and a dry flap
- Load capacity k3 (300 kg)
- Stainless steel 304 grid 1.5mm matt
- Dimension range 650, 750, 950 mm
- Installation options: to the open space/to the wall
- Easy dismantling when cleaning
- Option with a stainless steel frame
- Option with a grid for tiles / marble
- Outlet option side
- Self-adhesive waterproofing membrane included

Note: Kindly refer for installation guide to our Youtube channel

Scan the QR to visit our youtube channel for Installation Video

Linear Shower Channel without Stainless Steel Frame, outlet D50

FLOW RATE 46-52 l/min

MIN. HEIGHT 80 mm

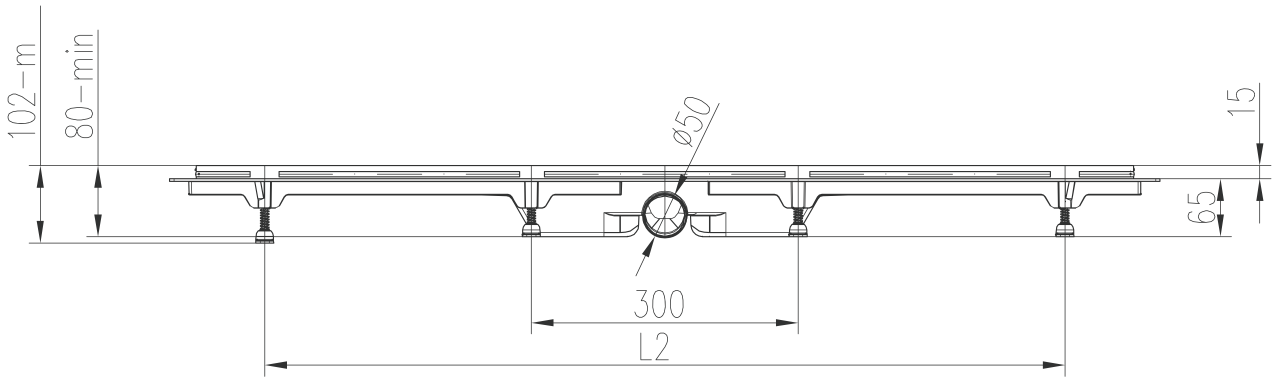

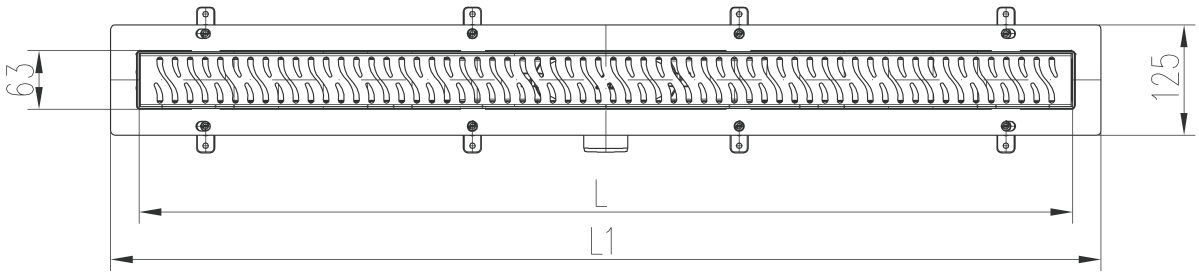

Model No	W x L (mm)	Height Adjustable (mm)	MRP
Classic 650	63x650	80-102	11,200
Classic 750	63x750	80-102	11,900
Classic 950	63x950	80-102	13,900

Classic Range: Rectangular Tile / Marble Insert Channel

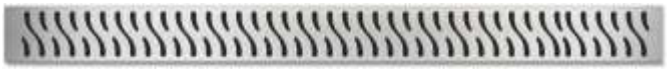

Model No	W x L (mm)	Height Adjustable (mm)	MRP
Harmony 650	63x650	80-102	10,100
Harmony 750	63x750	80-102	10,800
Harmony 950	63x950	80-102	12,700

Model No	W x L (mm)	Height Adjustable (mm)	MRP
Medium 650	63x650	80-102	10,100
Medium 750	63x750	80-102	10,800
Medium 950	63x950	80-102	12,700

Accessory	Qutlet	MRP
Reducer 01	From 50 mm to 40 mm	450

Linear Shower Channel with Stainless Steel Frame, outlet D50

FLOW RATE 46-52 l/min

MIN. HEIGHT 80 mm

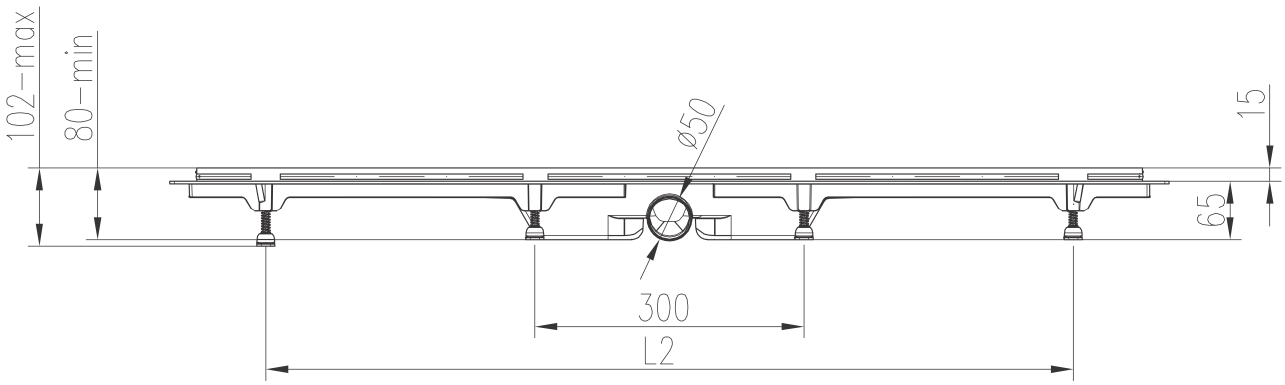

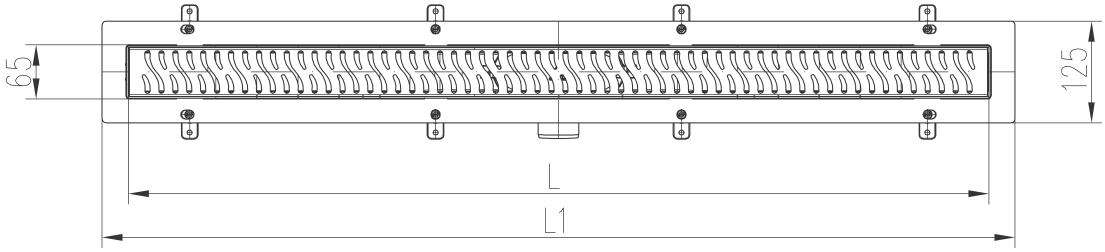

Model No	W x L (mm)	Height Adjustable (mm)	MRP
Classic DX 650	65x650	80-102	13,900
Classic DX 750	65x750	80-102	14,900
Classic DX 950	65x950	80-102	17,500

Classic Range: Rectangular Tile / Marble Insert Channel

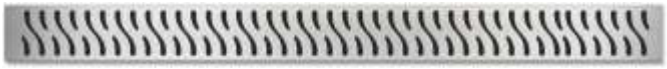

Model No	W x L (mm)	Height Adjustable (mm)	MRP
Harmony DX 650	65x650	80-102	12,800
Harmony DX 750	65x750	80-102	13,500
Harmony DX 950	65x950	80-102	15,900

Model No	W x L (mm)	Height Adjustable (mm)	MRP
Medium DX 650	65x650	80-102	12,800
Medium DX 750	65x750	80-102	13,500
Medium DX 950	65x950	80-102	15,900

Model No	W x L (mm)	Height Adjustable (mm)	MRP
Square DX 650	65x650	80-102	12,800
Square DX 750	65x750	80-102	13,500
Square DX 950	65x950	80-102	15,900

Accessory	Qutlet	MRP
Reducer 01	From 50 mm to 40 mm	450

Linear Shower Channel to the wall with stainless steel frame, Outlet D40/D50

FLOW RATE 30-38 l/min

MIN. HEIGHT 65 mm

Stainless Steel Frame

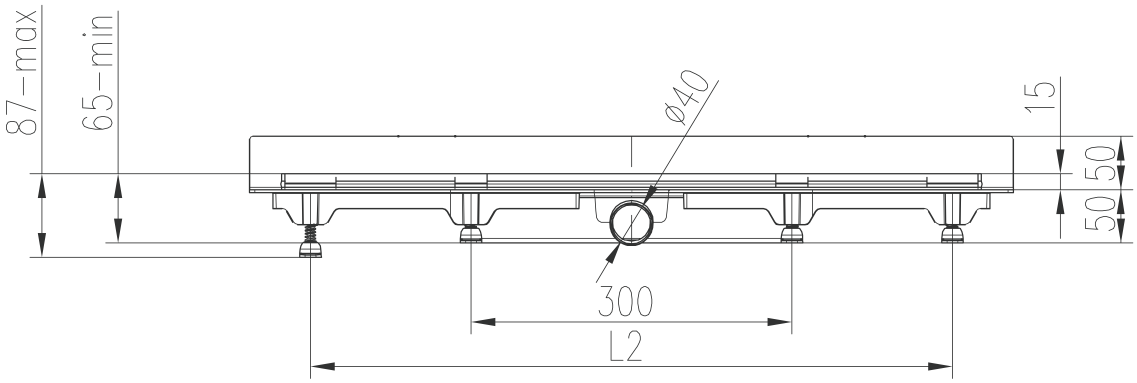

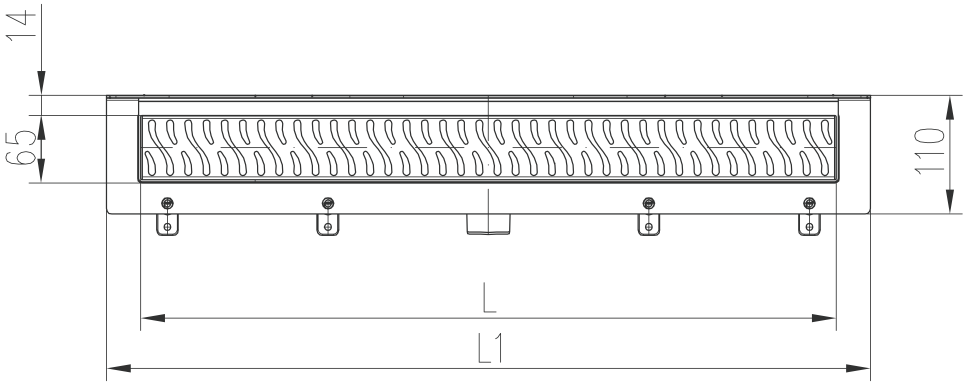

Model No	W x L (mm)	Height Adjustable (mm)	MRP
Classic Wall DX 650	65x650	65-87	18,500

Classic Range: Rectangular Tile / Marble Insert Channel

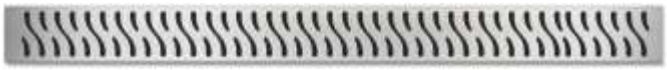

Model No	W x L (mm)	Height Adjustable (mm)	MRP
Harmony Wall DX 650	65x650	65-87	17,500

Model No	W x L (mm)	Height Adjustable (mm)	MRP
Medium Wall DX 650	65x650	65-87	17,500

SMART SERIES

DIMENSIONS		MRP (₹)
Cat. Model	Size (mm)	Matt
SFD 01	102 x 102	**1,000/-**
SFD 02	127 x 127	**1,080/-**

DIMENSIONS		MRP (₹)
Cat. Model	Size (mm)	Matt
SFD 01A	102 x 102	**1,000/-**
SFD 02A	127 x 127	**1,080/-**

Description

- **Drainage Capacity:** 35 - 40 L/Min
- **Inlet Size:** 50 mm
- **Grate Size:** 100 x 100 mm
- **Grate Material:** Stainless Steel 304
- **Odour Trap:** Removable

INSTALLATION INSTRUCTIONS

STEP-4
Put the final grit.

STEP-3
To install the adjustment body after putting water proofing paper & then level it with flooring (Tile or marble). Also cover it with red lid to prevent dust from entering the pipes

STEP-2
To put the overflow & cockroach trap body inside collection tank.

STEP-1
To install the collection tank at the time of leveling of the floor.

Floor Drain

Art is the visual expression of design. JAYNA shower channels offer a more artistic solution to shower drainage, taking the design to an even higher form. These high-quality channels meet all the practical, aesthetic and functional demands of today's contemporary showers and wet rooms. The channels meet the relevant sound insulation requirements, providing more peace and quiet in your home.

Jayna shower channels are available in various models. Each model comes in different lengths. These channels are specially designed for your requirments.

Thanks to sophisticated technology and intelligent details, plumbers can easily install these. Discover the exclusive world of JAYNA.

Features

- Easy to install and clean
- No more insect menace
- Prevents choking of drain and bad odour
- Ideal for bathrooms, homes, malls, hotels...
- Sizes available from 300 mm to 1000 mm and above
- Customised sizes also available as per requirement
- Drainer is provided along with each Shower Channel

AISI 304 18/8 STEEL | RUST PEOOF | LIFETIME WARRANTY | 100% Non-Magnetic

Featuring above is PARKER series shower channel

PARKER
SHOWER CHANNEL

DIMENSIONS		MRP (₹)
Cat. Model	Overall Size (mm)	Matt
PSC 06	82 x 300 x 25	**5,330/-**
PSC 07	82 x 450 x 25	**6,130/-**
PSC 08	82 x 600 x 25	**6,940/-**
PSC 09	82 x 750 x 25	**7,850/-**
PSC 10	82 x 1000 x 25	**9,030/-**
PSC 11	100 x 300 x 25	**6,130/-**
PSC 12	100 x 450 x 25	**7,060/-**
PSC 13	100 x 600 x 25	**7,990/-**
PSC 14	100 x 750 x 25	**9,060/-**
PSC 15	100 x 1000 x 25	**10,340/-**

Water outlet distance in corner/side position

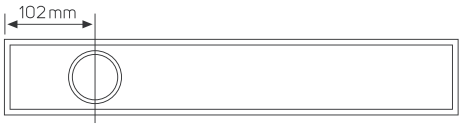

ULTRA
SHOWER CHANNEL

DIMENSIONS		MRP (₹)
Cat. Model	Overall Size (mm)	Matt
USC 01	125 x 300 x 30	**5,250/-**
USC 02	125 x 450 x 30	**6,100/-**
USC 03	125 x 600 x 30	**6,860/-**
USC 04	125 x 800 x 30	**7,710/-**
USC 05	125 x 1000 x 30	**8,780/-**

Water outlet distance in corner/side position

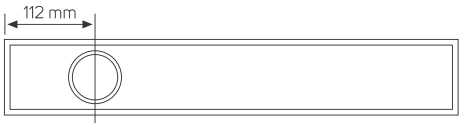

WATER DRAINER

Each shower channel is fitted with AIS1-304 (18/8) grade stainless steel Water Drainer It gives freedom from insects, cockroaches and bad odour

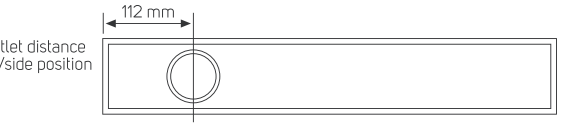

JADORE
SHOWER CHANNEL

DIMENSIONS		MRP (₹)
Cat. Model	Overall Size (mm)	Matt
JSC 01	100 x 300 x 30	**4,870/-**
JSC 02	100 x 450 x 30	**5,630/-**
JSC 03	100 x 600 x 30	**6,370/-**
JSC 04	100 x 800 x 30	**7,230/-**
JSC 05	100 x 1000 x 30	**8,310/-**

Water outlet distance in corner/side position

CARTIER
SHOWER CHANNEL

DIMENSIONS		MRP (₹)
Cat. Model	Overall Size (mm)	Matt
CSC 06	100 x 300 x 30	**4,870/-**
CSC 07	100 x 450 x 30	**5,630/-**
CSC 08	100 x 600 x 30	**6,370/-**
CSC 09	100 x 800 x 30	**7,230/-**
CSC 10	100 x 1000 x 30	**8,310/-**
CSC 11	125 x 300 x 30	**5,250/-**
CSC 12	125 x 450 x 30	**6,100/-**
CSC 13	125 x 600 x 30	**6,860/-**
CSC 14	125 x 800 x 30	**7,710/-**
CSC 15	125 x 1000 x 30	**8,780/-**
CSC 16	150 x 600 x 30	**8,240/-**
CSC 17	150 x 1000 x 30	**10,580/-**
CSC 21	125 x 1200 x 30	**11,600/-**
CSC 22	125 x 1500 x 30	**14,460/-**
CSC 23	125 x 2000 x 30	**19,320/-**
CSC 24	150 x 1500 x 30	**17,330/-**

Water outlet distance in corner/side position

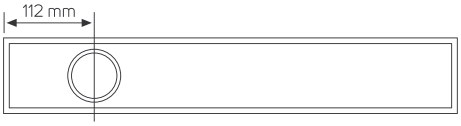

Water outlet distance in centre position

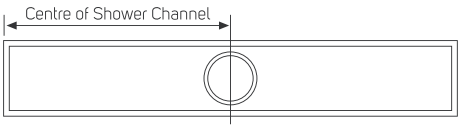

**Shower channel installation on page no 87

Magnum

Marble / Tile Insert Channel

Marble/Tile Insert channels are not only aesthetically appealing but are also easy to use & clean. Unlike many other conventional Marble/Tile Insert channels, the open outlet surface ensures that neither dirt nor bacteria is able to accumulate. Available in both square point drain and linear styles, they can be used for new builds, bathroom renovations, as well as drain replacements.

Features

- Open outlet surface: no hidden deposits
- Handy cover: easy and convenient to open
- Prevents choking of drain and bad odour
- Available in Rectangular and Square sizes
- Easy installation: complete installation kit for effortless installation and cleaning
- Customized sizes also available as per requirement
- Drainer is provided along with each Shower Channel

ARDEN RECTANGULAR TILE INSERT CHANNEL

Thickness 2.5 mm

DIMENSIONS		MRP (₹)
Cat. Model	Overall Size (mm)	Matt
ASC 01	100 x 200 x 22	**4,820/-**
ASC 02	100 x 300 x 22	**6,640/-**
ASC 03	100 x 450 x 22	**8,030/-**
ASC 04	100 x 600 x 22	**9,100/-**
ASC 05	100 x 800 x 22	**10,170/-**
ASC 05A	100 x 1000 x 22	**11,570/-**

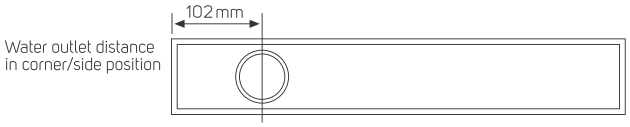

ARDEN SQUARE TILE INSERT CHANNEL

Thickness 2.5 mm

DIMENSIONS		MRP (₹)
Cat. Model	Overall Size (mm)	Matt
ASC 06	102 x 102 x 20	**2,190/-**
ASC 07	125 x 125 x 20	**2,420/-**
ASC 08	150 x 150 x 20	**3,060/-**
ASC 09	200 x 200 x 20	**5,630/-**

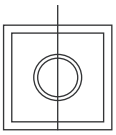

NEW

MAGNUM RECTANGULAR MARBLE INSERT CHANNEL

Thickness 2.5 mm

DIMENSIONS		MRP (₹)
Cat. Model	Overall Size (mm)	Matt
MSC 01	100 x 600 x 30	**9,820/-**
MSC 02	100 x 750 x 30	**11,030/-**
MSC 03	100 x 1000 x 30	**13,130/-**

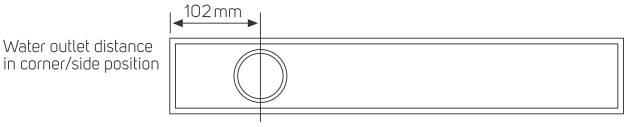

NEW

MAGNUM SQUARE MARBLE INSERT CHANNEL

Thickness 2.5 mm

DIMENSIONS		MRP (₹)
Cat. Model	Overall Size (mm)	Matt
MSC 06	102 x 102 x 30	**2,480/-**
MSC 07	125 x 125 x 30	**2,720/-**
MSC 08	150 x 150 x 30	**3,300/-**

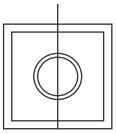

WATER DRAINER

Each shower channel is fitted with AIS1-304 (18/8) grade stainless steel Water Drainer It gives freedom from insects, cockroaches and bad odour

DAZZLE SQUARE TILE INSERT CHANNEL

Thickness 1.0 mm

DIMENSIONS		MRP (₹)
Cat. Model	Overall Size (mm)	Matt
DSC 01	125 x 125 x 20	**1,610/-**
DSC 02	150 x 150 x 20	**1,930/-**

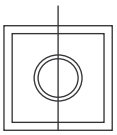

***Refer page 75 for installation purposes**

FLOOR DRAIN

Featuring above & in the bathroom: KING series Floor Drain

KING (Floor Drain - Set of 4 pieces (In 2.5 mm thickness))

DIMENSIONS		MRP (₹)
CAT. MODEL	Size (mm)	Matt
KFD 01	102 x 102	**1,790/-**
KFD 01A	125 x 125	**2,150/-**
KFD 01B	150 x 150	**2,470/-**

DIMENSIONS		MRP (₹)
CAT. MODEL	Size (mm)	Matt
KFD 02	102 x 102	**1,790/-**
KFD 02A	125 x 125	**2,150/-**
KFD 02B	150 x 150	**2,470/-**

DIMENSIONS		MRP (₹)
CAT. MODEL	Size (mm)	Matt
KFD 03	102 x 102	**2,020/-**
KFD 03A	125 x 125	**2,490/-**
KFD 03B	150 x 150	**2,780/-**

DIMENSIONS		MRP (₹)
CAT. MODEL	Size (mm)	Matt
KFD 04	102 x 102	**2,020/-**
KFD 04A	125 x 125	**2,490/-**
KFD 04B	150 x 150	**2,780/-**

REGULAR (Floor Drain - Set of 4 pieces)

DIMENSIONS		MRP (₹)		
CAT. MODEL	Size (mm)	Glossy	Matt	Anti-Scratch
RRB 80	Ø 80	**385/-**	**495/-**	**555/-**
RRB 102	Ø 102	**465/-**	**580/-**	**635/-**
RRB 127	Ø 127	**570/-**	**685/-**	**745/-**

DIMENSIONS		MRP (₹)		
CAT. MODEL	Size (mm)	Glossy	Matt	Anti-Scratch
RRB 80 H	Ø 80	**430/-**	**545/-**	**600/-**
RRB 102 H	Ø 102	**495/-**	**610/-**	**670/-**
RRB 127 H	Ø 127	**615/-**	**730/-**	**790/-**

DIMENSIONS		MRP (₹)		
CAT. MODEL	Size (mm)	Glossy	Matt	Anti-Scratch
RRB 102 DP	Ø 102	**465/-**	**580/-**	**635/-**
RRB 127 DP	Ø 127	**570/-**	**685/-**	**745/-**

DIMENSIONS		MRP (₹)		
CAT. MODEL	Size (mm)	Glossy	Matt	Anti-Scratch
RRF 80	Ø 80	**385/-**	**495/-**	**555-**
RRF 102	Ø 102	**465/-**	**580/-**	**635/-**
RRF 127	Ø 127	**570/-**	**685/-**	**745/-**
RRF 140	Ø 140	**670/-**	**785/-**	**895/-**

DIMENSIONS		MRP (₹)		
CAT. MODEL	Size (mm)	Glossy	Matt	Anti-Scratch
RRF 80 H	Ø 80	**430/-**	**545/-**	**600/-**
RRF 102 H	Ø 102	**495/-**	**610/-**	**670/-**
RRF 127 H	Ø 127	**615/-**	**730/-**	**790/-**
RRF 140 H	Ø 140	**715/**	**825/**	**940/-**

DIMENSIONS		MRP (₹)		
CAT. MODEL	Size (mm)	Glossy	Matt	Anti-Scratch
RRF 102 DP	Ø 102	**465/-**	**580/-**	**635/-**
RRF 127 DP	Ø 127	**570/-**	**685/-**	**745/-**
RRF 140 DP	Ø 140	**670/-**	**785/-**	**895/-**

CLASSIC Floor Drain - Set of 4 pieces

DIMENSIONS		MRP (₹)		
CAT. MODEL	Size (mm)	Glossy	Matt	Anti-Scratch
CRB 127	Ø 127	**540/-**	**655/-**	**705/-**

DIMENSIONS		MRP (₹)		
CAT. MODEL	Size (mm)	Glossy	Matt	Anti-Scratch
CSB 127	127 x 127	**595/-**	**705/-**	**765/-**
CSB 150	150 x 150	**660/-**	**770/-**	**825/-**

DIMENSIONS		MRP (₹)		
CAT. MODEL	Size (mm)	Glossy	Matt	Anti-Scratch
CRF 127	Ø 127	**540/-**	**655/-**	**705/-**
CRF 140	Ø 140	**630/-**	**745/-**	**800/-**

DIMENSIONS		MRP (₹)		
CAT. MODEL	Size (mm)	Glossy	Matt	Anti-Scratch
CSF 127	127 x 127	**595/-**	**705/-**	**765/-**
CSF 140	140 x 140	**650/-**	**760/-**	**815/-**
CSF 150	150 x 150	**660/-**	**770/-**	**825/-**

REGULAR Floor Drain - Set of 4 pieces

DIMENSIONS		MRP (₹)		
CAT. MODEL	Size (mm)	Glossy	Matt	Anti-Scratch
RSB 80	80 x 80	**455/-**	**565/-**	**625/-**
RSB 102	102 x 102	**570/-**	**685/-**	**745/-**
RSB 127	127 x 127	**670/-**	**785/-**	**895/-**
RSB 150	150 x 150	**760/-**	**875/-**	**990/-**

DIMENSIONS		MRP (₹)		
CAT. MODEL	Size (mm)	Glossy	Matt	Anti-Scratch
RSF 80	80 x 80	**455/-**	**565/-**	**625/-**
RSF 102	102 x 102	**570/-**	**685/-**	**800/-**
RSF 127	127 x 127	**670/-**	**785/-**	**895/-**
RSF 140	140 x 140	**725/-**	**835/-**	**950/-**
RSF 150	150 x 150	**760/-**	**875/-**	**990/-**

DIMENSIONS		MRP (₹)		
CAT. MODEL	Size (mm)	Glossy	Matt	Anti-Scratch
RSB 80 H	80 x 80	**520/-**	**630/-**	**685/-**
RSB 102 H	102 x 102	**615/-**	**730/-**	**790/-**
RSB 127 H	127 x 127	**715/-**	**825/-**	**940/-**
RSB 150 H	150 x 150	**820/-**	**935/-**	**1,050/-**

DIMENSIONS		MRP (₹)		
CAT. MODEL	Size (mm)	Glossy	Matt	Anti-Scratch
RSF 80 H	80 x 80	**520/-**	**630/-**	**685/-**
RSF 102 H	102 x 102	**615/-**	**730/-**	**790/-**
RSF 127 H	127 x 127	**715/-**	**825/-**	**940/-**
RSF 140 H	140 x 140	**770/-**	**885/-**	**1,000/-**
RSF 150 H	150 x 150	**820/-**	**935/-**	**1,050/-**

DIMENSIONS		MRP (₹)		
CAT. MODEL	Size (mm)	Glossy	Matt	Anti-Scratch
RSB 102 DP	102 x 102	**570/-**	**685/-**	**745/-**
RSB 127 DP	127 x 127	**670/-**	**785/-**	**895/-**
RSB 150 DP	150 x 150	**760/-**	**875/-**	**990/-**

DIMENSIONS		MRP (₹)		
CAT. MODEL	Size (mm)	Glossy	Matt	Anti-Scratch
RSF 102 DP	102 x 102	**570/-**	**685/-**	**800/-**
RSF 127 DP	127 x 127	**670/-**	**785/-**	**895/-**
RSF 140 DP	140 x 140	**725/-**	**835/-**	**950/-**
RSF 150 DP	150 x 150	**760/-**	**875/-**	**990/-**

FLORA Floor Drain - Set of 4 pieces

DIMENSIONS		MRP (₹)	
CAT. MODEL	Size (mm)	Glossy	Matt
FRB 127	Ø 127	**690/-**	**805/-**

DIMENSIONS		MRP (₹)	
CAT. MODEL	Size (mm)	Glossy	Matt
FSB 127	127 x 127	**810/-**	**925/-**
FSB 150	150 x 150	**860/-**	**970/-**

DIMENSIONS		MRP (₹)	
CAT. MODEL	Size (mm)	Glossy	Matt
FRF 127	Ø 127	**690/-**	**805/-**
FRF 140	Ø 140	**810/-**	**925/-**

DIMENSIONS		MRP (₹)	
CAT. MODEL	Size (mm)	Glossy	Matt
FSF 127	127 x 127	**810/-**	**925/-**
FSF 140	140 x 140	**840/-**	**955/-**
FSF 150	150 x 150	**860/-**	**970/-**

NEON Floor Drain - Set of 4 pieces

DIMENSIONS		MRP (₹)		
CAT. MODEL	Size (mm)	Glossy	Matt	Anti-Scratch
NRB 102	Ø 102	**615/-**	**730/-**	**-**
NRB 127	Ø 127	**690/-**	**805/-**	**-**

DIMENSIONS		MRP (₹)		
CAT. MODEL	Size (mm)	Glossy	Matt	Anti-Scratch
NRF 102	Ø 102	**615/-**	**730/-**	**840/-**
NRF 127	Ø 127	**690/-**	**805/-**	**920/-**
NRF 140	Ø 140	**780/-**	**890/-**	**1,005/-**

DIMENSIONS		MRP (₹)		
CAT. MODEL	Size (mm)	Glossy	Matt	Anti-Scratch
NSB 102	102 x 102	**690/-**	**805/-**	**-**
NSB 127	127 x 127	**810/-**	**925/-**	**-**
NSB 150	150 x 150	**860/-**	**970/-**	**-**

DIMENSIONS		MRP (₹)		
CAT. MODEL	Size (mm)	Glossy	Matt	Anti-Scratch
NSF 102	102 x 102	**690/-**	**805/-**	**920/-**
NSF 127	127 x 127	**810/-**	**925/-**	**1,150/-**
NSF 140	140 x 140	**840/-**	**955/-**	**1,185/-**
NSF 150	150 x 150	**860/-**	**970/-**	**1,200/-**

ELEGANT Floor Drain - Set of 4 pieces

DIMENSIONS		MRP (₹)		
CAT. MODEL	Size (mm)	Glossy	Matt	Anti-Scratch
ERF 140	Ø 140	**1,135/-**	**1,245/-**	**1,475/-**

DIMENSIONS		MRP (₹)		
CAT. MODEL	Size (mm)	Glossy	Matt	Anti-Scratch
ESF 127	127 x 127	**1,125/-**	**1,235/-**	**1,465/-**
ESF 140	140 x 140	**1,175/-**	**1,290/-**	**1,515/-**
ESF 150	150 x 150	**1,215/-**	**1,330/-**	**1,555/-**

PREMIUM Floor Drain - Set of 4 pieces

DIMENSIONS		MRP (₹)		
CAT. MODEL	Size (mm)	Glossy	Matt	Anti-Scratch
PRF 127	Ø 127	**690/-**	**805/-**	**920/-**
PRF 140	Ø 140	**780/-**	**890/-**	**1,005/-**

DIMENSIONS		MRP (₹)		
CAT. MODEL	Size (mm)	Glossy	Matt	Anti-Scratch
PRB 127	Ø 127	**690/-**	**805/-**	**920-**

DIMENSIONS		MRP (₹)		
CAT. MODEL	Size (mm)	Glossy	Matt	Anti-Scratch
PSB 127	127 x 127	**810/-**	**925/-**	**1,150/-**
PSB 150	150 x 150	**860/-**	**970/-**	**1,200/-**

DIMENSIONS		MRP (₹)		
CAT. MODEL	Size (mm)	Glossy	Matt	Anti-Scratch
PSF 127	127 x 127	**810/-**	**925/-**	**1,150/-**
PSF 140	140 x 140	**840/-**	**955/-**	**1,185/-**
PSF 150	150 x 150	**860/-**	**970/-**	**1,200/-**

ASPIRE Pop up series floor drain - Set of 4 pieces

DIMENSIONS		MRP (₹)		
CAT. MODEL	Size (mm)	Glossy	Matt	Anti-Scratch
ARB 127	Ø 127	**1,560/-**	**1,675/-**	**1,900/-**

DIMENSIONS		MRP (₹)		
CAT. MODEL	Size (mm)	Glossy	Matt	Anti-Scratch
ASF 127	127 x 127	**1,740/-**	**1,850/-**	**2,080/-**
ASF 140	140 x 140	**1,785/-**	**1,900/-**	**2,130/-**
ASF 150	150 x 150	**1,845/-**	**1,960/-**	**2,185/-**

DIMENSIONS		MRP (₹)		
CAT. MODEL	Size (mm)	Glossy	Matt	Anti-Scratch
ARF 127	Ø 127	**1,560/-**	**1,675/-**	**1,900/-**
ARF 140	Ø 140	**1,600/-**	**1,710/-**	**1,940/-**

Floor Drain cover in Aspire comes with Push and Pull mechanism.

It can easily be open or shut with a gentle push by foot on the cover.

MAGIC Water free series floor drain - Set of 3 pieces

DIMENSIONS		MRP (₹)		
CAT. MODEL	Size (mm)	Glossy	Matt	Anti-Scratch
MRF 127	Ø 127	**630/-**	**745/-**	**860/-**
MRF 140	Ø 140	**690/-**	**805/-**	**920/-**

DIMENSIONS		MRP (₹)		
CAT. MODEL	Size (mm)	Glossy	Matt	Anti-Scratch
MSB 127	127 x 127	**630/-**	**745/-**	**860/-**
MSB 150	150 x 150	**715/-**	**825/-**	**940/-**

DIMENSIONS		MRP (₹)		
CAT. MODEL	Size (mm)	Glossy	Matt	Anti-Scratch
MSF 127	127 x 127	**630/-**	**745/-**	**860/-**
MSF 140	140 x 140	**690/-**	**805/-**	**920/-**
MSF 150	150 x 150	**715/-**	**825/-**	**940/-**

The auto lock floor drain that works on 6th sense. Auto locking system operates with the pressure of water and closes when not in use.

GARNET Water free series floor drain - Set of 3 pieces

DIMENSIONS		MRP (₹)		
CAT. MODEL	Size (mm)	Glossy	Matt	Anti-Scratch
GSF 102	102 x 102	**585/-**	**695/-**	**810/-**
GSF 127	127 x 127	**630/-**	**745/-**	**860/-**
GSF 140	140 x 140	**690/-**	**805/-**	**920/-**
GSF 150	150 x 150	**715/-**	**825/-**	**940/-**

DIMENSIONS		MRP (₹)		
CAT. MODEL	Size (mm)	Glossy	Matt	Anti-Scratch
GSB 102	102 x 102	**550/-**	**665/-**	**780/-**
GSB 127	127 x 127	**595/-**	**705/-**	**820/-**

LOTUS Water free series floor drain - Set of 3 pieces

DIMENSIONS		MRP (₹)		
CAT. MODEL	Size (mm)	Glossy	Matt	Anti-Scratch
LSF 102	102 x 102	**585/-**	**695/-**	**810/-**
LSF 127	127 x 127	**630/-**	**745/-**	**860/-**
LSF 140	140 x 140	**690/-**	**805/-**	**920/-**
LSF 150	150 x 150	**715/-**	**825/-**	**940/-**

DIMENSIONS		MRP (₹)		
CAT. MODEL	Size (mm)	Glossy	Matt	Anti-Scratch
LSB 102	102 x 102	**550/-**	**665/-**	**780/-**
LSB 127	127 x 127	**595/-**	**705/-**	**820/-**

WONDER Floor Drain - Set of 4 pieces (Frame 1.0 mm / Gratings 1.5 mm)

NEW SERIES

DIMENSIONS		MRP (₹)
CAT. MODEL	Size (mm)	Matt
WSF 01	127 x 127	**970/-**
WSF 01A	150 x 150	**1,060/**

DIMENSIONS		MRP (₹)
CAT. MODEL	Size (mm)	Matt
WSF 02	127 x 127	**970/-**
WSF 02A	150 x 150	**1,060/**

DIMENSIONS		MRP (₹)
CAT. MODEL	Size (mm)	Matt
WSF 03	127 x 127	**970/-**
WSF 03A	150 x 150	**1,060/**

WONDER Gratings with Square frame - Set of 2 pieces (Frame 1.0 mm / Gratings 1.5 mm)

NEW SERIES

DIMENSIONS		MRP (₹)
CAT. MODEL	Size (mm)	Matt
WSG 01	127 x 127	**635/-**
WSG 01A	150 x 150	**725/-**

DIMENSIONS		MRP (₹)
CAT. MODEL	Size (mm)	Matt
WSG 02	127 x 127	**635/-**
WSG 02A	150 x 150	**725/-**

DIMENSIONS		MRP (₹)
CAT. MODEL	Size (mm)	Matt
WSG 03	127 x 127	**635/-**
WSG 03A	150 x 150	**725/-**

RAIN ROOF DRAINER - Set of 3 pieces

DIMENSIONS		MRP (₹)	
CAT. MODEL	Size (mm)	Glossy	Matt
JSB 127	127 x 127	**965/-**	**1,125/-**
JSB 150	150 x 150	**1,080/-**	**1,195/-**

DIMENSIONS		MRP (₹)	
CAT. MODEL	Size (mm)	Glossy	Matt
JSF 127	127 x 127	**965/-**	**1,125/-**
JSF 140	140 x 140	**1,050/-**	**1,160/-**
JSF 150	150 x 150	**1,080/-**	**1,195/-**

DIMENSIONS		MRP (₹)	
CAT. MODEL	Size (mm)	Glossy	Matt
JRF 127	Ø 127	**895/-**	**1,010/-**
JRF 140	Ø 140	**975/-**	**1,090/-**

DIMENSIONS		MRP (₹)
CAT. MODEL	Size (mm)	Matt
JRD 01	102 x 102 x 102	**380/-**
JRD 02	127 x 127 x 127	**460/-**

(In 1.5 mm thickness)

CLEAN OUT Set of 2 pieces 1mm thickness

DIMENSIONS		MRP (₹)	
CAT. MODEL	Size (mm)	Glossy	Matt
COR 102	Ø 102	**420/-**	**535/-**
COR 127	Ø 127	**465/-**	**580/-**
COR 140	Ø 140	**495/-**	**610/-**

DIMENSIONS		MRP (₹)	
CAT. MODEL	Size (mm)	Glossy	Matt
COS 102	102 x 102	**445/-**	**555/-**
COS 127	127 x 127	**485/-**	**600/-**
COS 140	140 x 140	**525/-**	**635/-**
COS 150	150 x 150	**580/-**	**690/-**

CLEAN OUT HEAVY 1.5mm thickness

DIMENSIONS		MRP (₹)	
CAT. MODEL	Size (mm)	Glossy	Matt
COH 140	140 x 140	**730/-**	**835/-**
1.5 mm thickness			
COH 150	150 x 150	**780/-**	**885/-**
1.5 mm thickness			

CLEAN OUT BIG Set of 2 pieces

DIMENSIONS		MRP (₹)
CAT. MODEL	Size (mm)	Matt
COB 150	150 x 150	**1,700/-**
COB 200	200 x 200	**2,155/-**
COB 250	250 x 250	**2,720/-**

GRATINGS With frame - Set of 2 pieces

DIMENSIONS		MRP (₹)		
CAT. MODEL	Size (mm)	Glossy	Matt	Anti-Scratch
ERG 140	Ø 140	**700/-**	**815/-**	**990/-**

DIMENSIONS		MRP (₹)		
CAT. MODEL	Size (mm)	Glossy	Matt	Anti-Scratch
ESG 127	127 x 127	**715/-**	**825/-**	**1,055/-**
ESG 140	140 x 140	**745/-**	**860/-**	**1,085/-**
ESG 150	150 x 150	**780/-**	**890/-**	**1,120/-**

GRATINGS 1 piece

DIMENSIONS		MRP (₹)		
CAT. MODEL	Size (mm)	Glossy	Matt	Anti-Scratch
NG 82 R	Ø 82	**200/-**	**245/-**	**315/-**
NG 104 R	Ø 104	**220/-**	**265/-**	**335/-**

DIMENSIONS		MRP (₹)		
CAT. MODEL	Size (mm)	Glossy	Matt	Anti-Scratch
R 52	Ø 52	**110/-**	**150/-**	**180/-**
R 64	Ø 64	**145/-**	**195/-**	**215/-**
R 82	Ø 82	**180/-**	**220/-**	**245/-**
R 104	Ø 104	**200/-**	**245/-**	**265/-**

GRATINGS With frame - Set of 2 pieces

DIMENSIONS		MRP (₹)		
CAT. MODEL	Size (mm)	Glossy	Matt	Anti-Scratch
RRG 80	Ø 80	**195/-**	**240/-**	**310/-**
RRG 102	Ø 102	**240/-**	**285/-**	**350/-**
RRG 127	Ø 127	**285/-**	**330/-**	**400/-**
RRG 140	Ø 140	**350/-**	**400/-**	**465/-**

DIMENSIONS		MRP (₹)		
CAT. MODEL	Bowl Size (mm)	Glossy	Matt	Anti-Scratch
RSG 80	80 x 80	**215/-**	**260/-**	**310/-**
RSG 102	102 x 102	**270/-**	**320/-**	**350/-**
RSG 127	127 x 127	**335/-**	**380/-**	**405/-**
RSG 140	140 x 140	**360/-**	**410/-**	**430/-**
RSG 150	150 x 150	**390/-**	**435/-**	**460/-**

DIMENSIONS		MRP (₹)		
CAT. MODEL	Size (mm)	Glossy	Matt	Anti-Scratch
RRG 102 H	Ø 102	**280/-**	**330/-**	**395/-**
RRG 127 H	Ø 127	**330/-**	**375/-**	**445/-**
RRG 140 H	Ø 140	**395/-**	**445/-**	**510/-**

DIMENSIONS		MRP (₹)		
CAT. MODEL	Size (mm)	Glossy	Matt	Anti-Scratch
RSG 102 H	102 x 102	**315/-**	**360/-**	**395/-**
RSG 127 H	127 x 127	**380/-**	**420/-**	**450/-**
RSG 150 H	150 x 150	**430/-**	**480/-**	**500/-**

DIMENSIONS		MRP (₹)		
CAT. MODEL	Size (mm)	Glossy	Matt	Anti-Scratch
RRG 102 DP	Ø 102	**240/-**	**285/-**	**350/-**
RRG 127 DP	Ø 127	**285/-**	**330/-**	**400/-**
RRG 140 DP	Ø 140	**350/-**	**400/-**	**465/-**

DIMENSIONS		MRP (₹)		
CAT. MODEL	Size (mm)	Glossy	Matt	Anti-Scratch
RSG 102 DP	102 x 102	**270/-**	**320/-**	**350/-**
RSG 127 DP	127 x 127	**335/-**	**385/-**	**405/-**
RSG 140 DP	140 x 140	**360/-**	**410/-**	**430/-**
RSG 150 DP	150 x 150	**390/-**	**435/-**	**460/-**

DIMENSIONS		MRP (₹)		
CAT. MODEL	Size (mm)	Glossy	Matt	Anti-Scratch
NRG 102	Ø 102	**285/-**	**330/-**	**400/-**
NRG 127	Ø 127	**365/-**	**415/-**	**480/-**
NRG 140	Ø 140	**385/-**	**430/-**	**495/-**

DIMENSIONS		MRP (₹)		
CAT. MODEL	Size (mm)	Glossy	Matt	Anti-Scratch
NSG 102	102 x 102	**410/-**	**455/-**	**525/-**
NSG 127	127 x 127	**425/-**	**470/-**	**540/-**
NSG 140	140 x 140	**485/-**	**535/-**	**600/-**
NSG 150	150 x 150	**515/-**	**555/-**	**625/-**

DIMENSIONS		MRP (₹)		
CAT. MODEL	Size (mm)	Glossy	Matt	Anti-Scratch
NRG 102 H	Ø 102	**330/-**	**375/-**	**445/-**
NRG 127 H	Ø 127	**410/-**	**460/-**	**525/-**
NRG 140 H	Ø 140	**425/-**	**475/-**	**540/-**

DIMENSIONS		MRP (₹)		
CAT. MODEL	Size (mm)	Glossy	Matt	Anti-Scratch
NSG 102 H	102 x 102	**455/-**	**495/-**	**565/-**
NSG 127 H	127 x 127	**470/-**	**515/-**	**585/-**
NSG 150 H	150 x 150	**555/-**	**600/-**	**670/-**

GRATINGS With frame - Set of 2 pieces

DIMENSIONS		MRP (₹)		
CAT. MODEL	Size (mm)	Glossy	Matt	Anti-Scratch
PRG 127	Ø 127	**365/-**	**415/-**	**480/-**
PRG 140	Ø 140	**385/-**	**430/-**	**495/-**

DIMENSIONS		MRP (₹)		
CAT. MODEL	Size (mm)	Glossy	Matt	Anti-Scratch
PSG 127	127 x 127	**410/-**	**455/-**	**525/-**
PSG 140	140 x 140	**425/-**	**470/-**	**540/-**
PSG 150	150 x 150	**445/-**	**485/-**	**555/-**

TOPAZ Gratings with beeding & frame - Set of 2 pieces

DIMENSIONS		MRP (₹)	
CAT. MODEL	Size (mm)	Glossy	Matt
TR 102	Ø 102	**240/-**	**280/-**
TR 127	Ø 127	**255/-**	**295/-**
TR 140	Ø 140	**290/-**	**335/-**

DIMENSIONS		MRP (₹)	
CAT. MODEL	Size (mm)	Glossy	Matt
TR 102 DP	Ø 102	**240/-**	**280/-**
TR 127 DP	Ø 127	**255/-**	**295/-**
TR 140 DP	Ø 140	**290/-**	**335/-**

DIMENSIONS		MRP (₹)	
CAT. MODEL	Size (mm)	Glossy	Matt
TR 102 H	Ø 102	**270/-**	**315/-**
TR 127 H	Ø 127	**300/-**	**345/-**
TR 140 H	Ø 140	**350/-**	**395/-**

DIMENSIONS		MRP (₹)	
CAT. MODEL	Size (mm)	Glossy	Matt
TR 102 DP H	Ø 102	**270/-**	**315/-**
TR 127 DP H	Ø 127	**300/-**	**345/-**
TR 140 DP H	Ø 140	**350/-**	**395/-**

DIMENSIONS		MRP (₹)	
CAT. MODEL	Size (mm)	Glossy	Matt
TS 102	102 x 102	**270/-**	**315/-**
TS 127	127 x 127	**320/-**	**360/-**
TS 140	140 x 140	**355/-**	**400/-**
TS 150	150 x 150	**380/-**	**445/-**

DIMENSIONS		MRP (₹)	
CAT. MODEL	Size (mm)	Glossy	Matt
TS 102 DP	102 x 102	**270/-**	**315/-**
TS 127 DP	127 x 127	**320/-**	**360/-**
TS 140 DP	140 x 140	**355/-**	**400/-**
TS 150 DP	150 x 150	**380/-**	**445/-**

DIMENSIONS		MRP (₹)	
CAT. MODEL	Size (mm)	Glossy	Matt
TS 102 H	102 x 102	**300/-**	**345/-**
TS 127 H	127 x 127	**355/-**	**400/-**
TS 140 H	140 x 140	**390/-**	**430/-**
TS 150 H	150 x 150	**410/-**	**455/-**

DIMENSIONS		MRP (₹)	
CAT. MODEL	Size (mm)	Glossy	Matt
TS 102 DP H	102 x 102	**300/-**	**345/-**
TS 127 DP H	127 x 127	**355/-**	**400/-**
TS 140 DP H	140 x 140	**390/-**	**430/-**
TS 150 DP H	150 x 150	**410/-**	**455/-**

GRATINGS With LID & NOB - Set of 3 pieces.

DIMENSIONS		MRP (₹)		
CAT. MODEL	Size (mm)	Glossy	Matt	Anti-Scratch
LR 01	Ø 127	**410/-**	**455/-**	**525/-**
LR 02	Ø 140	**445/-**	**485/-**	**555/-**

DIMENSIONS		MRP (₹)		
CAT. MODEL	Size (mm)	Glossy	Matt	Anti-Scratch
LS 01	127 x 127	**465/-**	**515/-**	**580/-**
LS 02	140 x 140	**485/-**	**535/-**	**600/-**
LS 03	150 x 150	**515/-**	**555/-**	**625/-**

TOPAZ GOLD Gratings with frame - Set of 2 pieces - Flat cut

DIMENSIONS		MRP (₹)	
CAT. MODEL	Size (mm)	Glossy	Matt
TGR 127	Ø 127	**270/-**	**315/-**
TGR 140	Ø 140	**300/-**	**345/-**

DIMENSIONS		MRP (₹)	
CAT. MODEL	Size (mm)	Glossy	Matt
TGR 127 H	Ø 127	**310/-**	**350/-**
TGR 140 H	Ø 140	**350/-**	**400/-**

DIMENSIONS		MRP (₹)	
CAT. MODEL	Size (mm)	Glossy	Matt
TGR 127 DP	Ø 127	**270/-**	**315/-**
TGR 140 DP	Ø 140	**300/-**	**345/-**

DIMENSIONS		MRP (₹)	
CAT. MODEL	Size (mm)	Glossy	Matt
TGR 127 DP H	Ø 127	**310/-**	**350/-**
TGR 140 DP H	Ø 140	**350/-**	**400/-**

DIMENSIONS		MRP (₹)	
CAT. MODEL	Size (mm)	Glossy	Matt
TGS 127	127 x 127	**315/-**	**355/-**
TGS 140	140 x 140	**350/-**	**400/-**
TGS 150	150 x 150	**365/-**	**415/-**

DIMENSIONS		MRP (₹)	
CAT. MODEL	Size (mm)	Glossy	Matt
TGS 127 DP	127 x 127	**315/-**	**355/-**
TGS 140 DP	140 x 140	**350/-**	**400/-**
TGS 150 DP	150 x 150	**365/-**	**415/-**

DIMENSIONS		MRP (₹)	
CAT. MODEL	Size (mm)	Glossy	Matt
TGS 127 H	127 x 127	**365/-**	**415/-**
TGS 140 H	140 x 140	**410/-**	**455/-**
TGS 150 H	150 x 150	**455/-**	**495/-**

DIMENSIONS		MRP (₹)	
CAT. MODEL	Size (mm)	Glossy	Matt
TGS 127 DP H	127 x 127	**365/-**	**415/-**
TGS 140 DP H	140 x 140	**410/-**	**455/-**
TGS 150 DP H	150 x 150	**455/-**	**495/-**

INDUS KING

DIMENSIONS		MRP (₹)	
CAT. MODEL	Size (mm)	Glossy	Matt
IK 190	190 x 190	**4,525/-**	**4,640/-**

NEW HEAVY GRATINGS (In 1.5 mm Thickness)

DIMENSIONS		MRP (₹)	
CAT. MODEL	Size (mm)	Glossy	Matt
NHG 140	140 x 140	**730/-**	**835/-**
NHG 150	150 x 150	**780/-**	**885/-**

OPAL Gratings -1 piece

DIMENSIONS		MRP (₹)	
CAT. MODEL	Size (mm)	Glossy	Matt
OR 60	Ø 60	**125/-**	**165/-**
OR 80	Ø 80	**155/-**	**200/-**
OR 102	Ø 102	**190/-**	**230/-**
OR 114	Ø 114	**215/-**	**260/-**
OR 127	Ø 127	**220/-**	**260/-**

DIMENSIONS		MRP (₹)	
CAT. MODEL	Size (mm)	Glossy	Matt
OR 80 DP	Ø 80	**155/-**	**200/-**
OR 102 DP	Ø 102	**190/-**	**230/-**
OR 114 DP	Ø 114	**215/-**	**260/-**
OR 127 DP	Ø 127	**220/-**	**260/-**

DIMENSIONS		MRP (₹)	
CAT. MODEL	Size (mm)	Glossy	Matt
OS 60	60 x 60	**130/-**	**180/-**
OS 80	80 x 80	**160/-**	**210/-**
OS 102	102 x 102	**200/-**	**245/-**
OS 127	127 x 127	**230/-**	**275/-**
OS 140	140 x 140	**250/-**	**295/-**
OS 150	150 x 150	**260/-**	**310/-**

DIMENSIONS		MRP (₹)	
CAT. MODEL	Size (mm)	Glossy	Matt
OS 80 DP	80 x 80	**160/-**	**210/-**
OS 102 DP	102 x 102	**200/-**	**245/-**
OS 127 DP	127 x 127	**230/-**	**275/-**
OS 140 DP	140 x 140	**250/-**	**295/-**
OS 150 DP	150 x 150	**260/-**	**310/-**

OPAL GOLD Gratings -1 piece - Flat cut

DIMENSIONS		MRP (₹)	
CAT. MODEL	Size (mm)	Glossy	Matt
ORG 01	Ø 102	**215/-**	**260/-**
ORG 02	Ø 114	**225/-**	**270/-**
ORG 03	Ø 127	**250/-**	**290/-**

DIMENSIONS		MRP (₹)	
CAT. MODEL	Size (mm)	Glossy	Matt
ORG 01 DP	Ø 102	**215/-**	**260/-**
ORG 02 DP	Ø 114	**225/-**	**270/-**
ORG 03 DP	Ø 127	**250/-**	**290/-**

DIMENSIONS		MRP (₹)	
CAT. MODEL	Size (mm)	Glossy	Matt
OSG 102	102 x 102	**225/-**	**270/-**
OSG 127	127 x 127	**260/-**	**310/-**
OSG 140	140 x 140	**300/-**	**345/-**
OSG 150	150 x 150	**340/-**	**385/-**

DIMENSIONS		MRP (₹)	
CAT. MODEL	Size (mm)	Glossy	Matt
OSG 102 DP	102 x 102	**225/-**	**270/-**
OSG 127 DP	127 x 127	**260/-**	**310/-**
OSG 140 DP	140 x 140	**300/-**	**345/-**
OSG 150 DP	150 x 150	**340/-**	**385/-**

STRONGLY BUILT

MANHOLE COVER

BENEFITS OF SS MANHOLE COVERS:

- Convenient to installation and inspection.
- Overcomes the problem of ringing of the original Manhole cover.
- SS Manhole covers are corrosion resistant. It is not only moisture proof, acid and alkali resistant but also a long service providing product.

Made from high grade AISI-304 (18/8) Stainless Steel (18% Chrome, 8% Nickel)

MANHOLE COVER Thickness: Cover 1.5 mm, Base Frame 2.5 mm

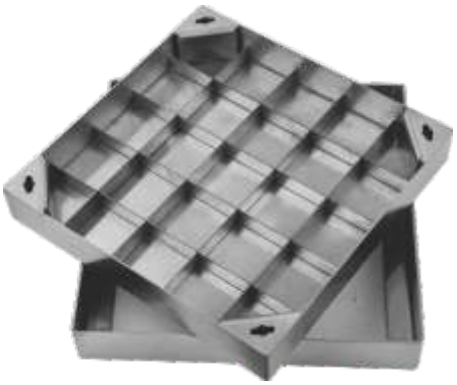

	DIMENSIONS		MRP (`)
CAT. MODEL	Inner Size (inch/mm)	Outer Size (inch/mm)	Matt
MHC 01 Base Frame : 1.5 mm Cover : 1.2 mm	10 x 10 255 x 255	12 x 12 305 x 305	7,000
MHC 01 A Base Frame : 1.5 mm Cover : 1.2 mm	14 x 14 360 x 360	16 x 16 410 x 410	9,000
MHC 02 Base Frame : 1.5 mm Cover : 1.2 mm	16 x 16 410 x 410	18 x 18 460 x 460	10,600
MHC 02 A Base Frame : 2.5 mm Cover : 1.5 mm	20 x 20 510 x 510	22 x 22 560 x 560	12,500
MHC 03 Base Frame : 2.5 mm Cover : 1.5 mm	22 x 22 560 x 560	24 x 24 610 x 610	13,500
MHC 04 Base Frame : 2.5 mm Cover : 1.5 mm	24 x 24 610 x 610	26 x 26 660 x 660	15,500
MHC 04 A Base Frame : 2.5 mm Cover : 1.5 mm	26 x 26 660 x 660	28 x 28 710 x 710	16,000
MHC 05 Base Frame : 2.5 mm Cover : 1.5 mm	28 x 28 710 x 710	30 x 30 760x 760	16,500

HYDRO Vertical Grating -1 piece

DIMENSIONS		MRP (₹)
CAT. MODEL	Size (mm)	Matt
HR 01	150 x 600	**2,515/-**
HR 02	200 x 600	**3,195/-**
HR 03	300 x 600	**4,105/-**

DIMENSIONS		MRP (₹)
CAT. MODEL	Size (mm)	Matt
HR 04	102 x 102	**335/-**
HR 05	102 x 150	**430/-**
HR 06	102 x 200	**550/-**
HR 07	102 x 300	**770/-**

DIMENSIONS			MRP (₹)
CAT. MODEL	Thickness	Size (mm)	Matt
HS 01	1mm	80 x 80	**205/-**
HS 02	1mm	106 x 106	**275/-**
HS 03	1.2mm	130 x 130	**350/-**
HS 04	1.2mm	150 x 150	**445/-**
HS 05	1.5mm	200 x 200	**1,005/-**
HS 06	1.5mm	250 x 250	**1,445/-**
HS 07	1.5mm	300 x 300	**1,980/-**

HYDRO Vertical Grating with frame -2 pieces

DIMENSIONS		MRP (₹)
CAT. MODEL	Size (mm)	Matt
HRF 01	150 x 600	**3,535/-**
HRF 02	200 x 600	**4,560/-**
HRF 03	300 x 600	**5,625/-**

DIMENSIONS		MRP (₹)
CAT. MODEL	Size (mm)	Matt
HSF 05	200 x 200	**2,740/-**
HSF 06	250 x 250	**3,195/-**
HSF 07	300 x 300	**3,650/-**

RAIN WATER DRAINAGE COVER Thickness: Cover 1.5mm, Frame 2.5mm.

NEW

DIMENSIONS			MRP (₹)
CAT. MODEL	Inner Size (inch/mm)	Outer Size (inch/mm)	Matt
RWD 01	09 x 09 225 x 225	11 x 11 280 x 280	**4,480/-**
RWD 02	12 x 12 305 x 305	14 x 14 350 x 350	**5,455/-**

DIMENSIONS			MRP (₹)
CAT. MODEL	Inner Size (inch/mm)	Outer Size (inch/mm)	Matt
RWC 01	09 x 09 225 x 225	11 x 11 280 x 280	**4,480/-**
RWC 02	12 x 12 305 x 305	14 x 14 350 x 350	**5,455/-**

ACCESS COVER Thickness: Cover 1.2mm, Frame 1.0mm.

NEW

DIMENSIONS			MRP (₹)
CAT. MODEL	Inner Size (inch/mm)	Outer Size (inch/mm)	Matt
AC 01	09 x 09 225 x 225	11 x 11 280 x 280	**3,295/-**
AC 02	12 x 12 305 x 305	14 x 14 350 x 350	**4,190/-**

BOX CHANNEL

NEW

DIMENSIONS		MRP (₹)
CAT. MODEL	Size (mm)	Matt
BC 01 (Vertical Outlet)	330 x 330	**11,340/-**
BC 02 (Horizontal Outlet)	330 x 330	**11,340/-**

With anti-skid grate and outlet 4"

DIMENSIONS		MRP (₹)
CAT. MODEL	Size (mm)	Matt
BC 03 (Vertical Outlet)	330 x 330	**5,940/-**
BC 04 (Horizontal Outlet)	330 x 330	**5,940/-**
BC 05 (Vertical Outlet)	300 x 600	**10,260/-**
BC 06 (Vertical Outlet)	300 x 1000	**14,580/-**

With normal grate and outlet 4"

PVC ACCESSORIES

NEW

BOTTLE TRAP	
CAT. MODEL	M.R.P
BT 01	**700/-**

* Ø 1-1/2 inch inlet & Ø 40 mm outlet

BOTTLE TRAP	
CAT. MODEL	M.R.P
BT 02	**700/-**

* Ø 1-1/4 inch inlet & Ø 40 mm outlet

PVC FLEXIBLE WASTE PIPE	
CAT. MODEL	M.R.P
FP 01	**185/-**

* Ø 1-1/2 inch inlet & Ø 32 mm outlet

PVC FLEXIBLE WASTE PIPE	
CAT. MODEL	M.R.P
FP 02	**205/-**

* Ø 1-1/2 inch inlet / Ø 1-1/4 inch inlet & Ø 32 mm outlet

BATH ACCESSORIES

HEALTH FAUCETS

DIMENSIONS		MRP (₹)
CAT. MODEL	Size (mtr.)	Glossy
HF 01 A (Brass)	1.5	**1,335/-**

DIMENSIONS		MRP (₹)
CAT. MODEL	Size (mtr.)	Glossy
HF 02 (Brass & Ivory)	1	**1,220/-**
HF 02 A (Brass & Ivory)	1.5	**1,335/-**

JET SPRAY With CP tube (Stainless Steel)

DIMENSIONS		MRP (₹)	
CAT. MODEL	Size (mtr.)	Glossy	Matt
JS 01	1	**595/-**	**650/-**
JS 01A	1.5	**660/-**	**700/-**

DIMENSIONS		MRP (₹)	
CAT. MODEL	Size (mtr.)	Glossy	Matt
JS 02	1	**595/-**	**650/-**
JS 02A	1.5	**660/-**	**700/-**

DIMENSIONS		MRP (₹)	
CAT. MODEL	Size (mtr.)	Glossy	Matt
JS 03	1	**595/-**	**650/-**
JS 03A	1.5	**660/-**	**700/-**

DIMENSIONS		MRP (₹)	
CAT. MODEL	Size (mtr.)	Glossy	Matt
JS 04	1	**595/-**	**650/-**
JS 04A	1.5	**660/-**	**700/-**

FLANGES (Stainless Steel)

DIMENSIONS		MRP (₹)	
CAT. MODEL	Size	Glossy	Matt
F 01	Ø 80	**85/-**	**110/-**

DIMENSIONS		MRP (₹)	
CAT. MODEL	Size	Glossy	Matt
F 02	Ø 80	**85/-**	**110/-**

DIMENSIONS		MRP (₹)	
CAT. MODEL	Size	Glossy	Matt
F 03	Ø 72	**80/-**	**110/-**

DIMENSIONS		MRP (₹)	
CAT. MODEL	Size	Glossy	Matt
F 04	Ø 72	**80/-**	**110/-**

HOSES

Shower Tube (Chrome)

Description: PVC inner lining with chromo look
Application: For health faucets & showers

DIMENSIONS		MRP (₹)
CAT. MODEL	Size (mtr.)	
JST 01	1.2	**1,080/-**

Stainless Steel Braided -Connector Pipe

Description: Epdm Stainless Steel 304 Braided Hose
Application: For Faucets

DIMENSIONS		MRP (₹)
CAT. MODEL	Size (mm)	
JCP 10	450	**225/-**
JCP 11	600	**295/-**

Stainless Steel Braided -Connection Pipe

Description: Epdm Stainless Steel 304 Braided Hose
Application: For Geysers And Heaters

DIMENSIONS		MRP (₹)
CAT. MODEL	Size (mm)	
JCP 01	300	**185/-**
JCP 02	450	**225/-**
JCP 03	600	**285/-**
JCP 04	750	**485/-**
JCP 05	900	**660/-**

PVC -Connection Pipe With Brassnut

Description: Overall Diameter 15 mm
Application: For Geysers And Heaters

DIMENSIONS		MRP (₹)
CAT. MODEL	Size (mm)	
PCP 01	300	**160/-**
PCP 02	450	**175/-**
PCP 03	600	**215/-**
PCP 04	750	**245/-**
PCP 05	900	**270/-**

EXTENSION NIPPLES Chrome Finish (Brass)

NEW

DIMENSIONS		Quantity Per Box	MRP (₹) Per Piece
CAT. MODEL	Size (mm)		
JEN 01	25	36	**105/-**
JEN 02	40	24	**125/-**
JEN 03	50	24	**135/-**
JEN 04	63	24	**160/-**
JEN 05	70	12	**195/-**
JEN 06	100	12	**260/-**
JEN 07	150	12	**445/-**

CP BUSH MALE		
CAT. MODEL	Quantity Per Box	MRP (₹) Per Piece
CBM 01	4	**155/-**

SIZE: **Male** threading 3/8 **Female** threading 15mm

CP BUSH FEMALE		
CAT. MODEL	Quantity Per Box	MRP (₹) Per Piece
CBM 01	4	**155/-**

SIZE: **Male** threading 15mm **Female** threading 3/8

CP HEX NIPPLE			
CAT. MODEL	Size (mm)	Quantity Per Box	MRP (₹) Per Piece
JHN 01	41.50	20	**130/-**

CP ELBOW			
CAT. MODEL	Size (mm)	Quantity Per Box	MRP (₹) Per Piece
CPE 01	39.5	4	**280/-**

CP TEE			
CAT. MODEL	Size (mm)	Quantity Per Box	MRP (₹) Per Piece
CPT 01	48.6	4	**280/-**

ASSEMBLING ORDER OF SHOWER CHANNEL

Corner / Side position of water outlet

Corner / Side position of water outlet

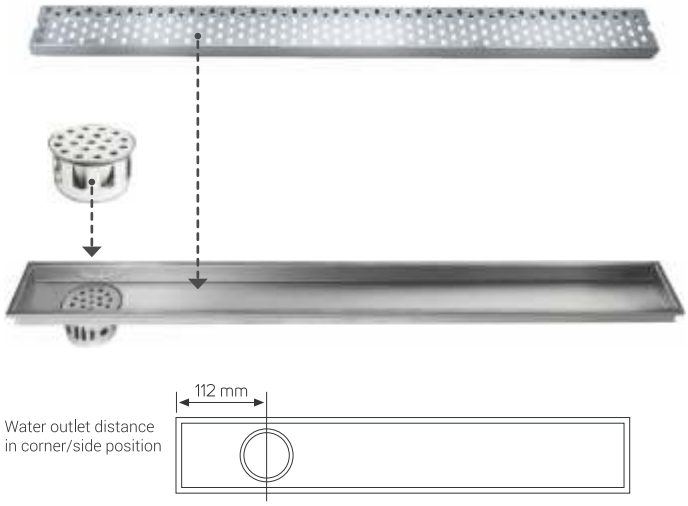

Center position of water outlet

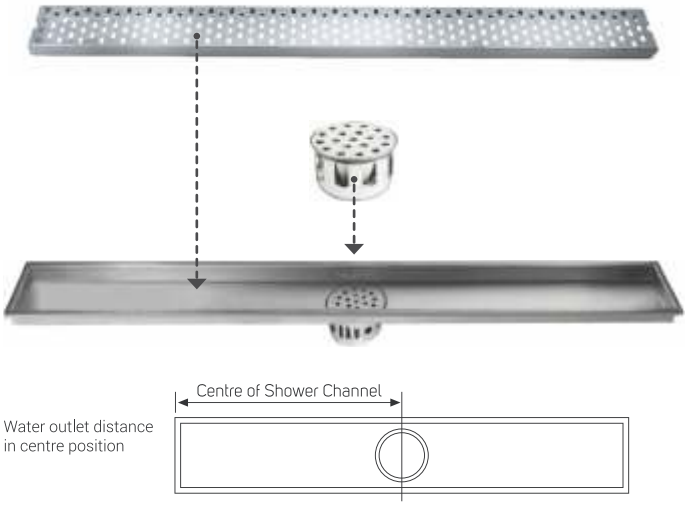

HOW TO INSTALL TILE / MARBLE SHOWER CHANNEL

Corner / Side position of water outlet

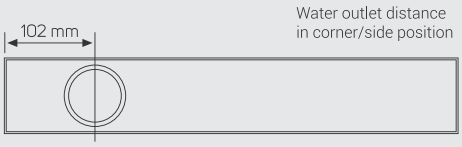

Note

- Standard position of the Water Outlet in all shower channels is in corner (as shown in the diagram/picture) except size/length upto 300 (mm) & Cat. Model JSC-01, USC-01, CSC-01, CSC-06, CSC-11, ASC-01, ASC-02, PSC-01 & PSC-02 respt.
- In Cat. Model JSC-01, USC-01, CSC-01, CSC-06, CSC-12, ASC-01 & ASC-02 water outlet hole is provided in centre only.
- Water Outlet hole can also be provided in centre as per your requirement / demand except (size /length upto 300 mm & above mentioned Cat. Models.

Jayna Gallery

Delhi

C-65, 1st Floor, Sharda Puri,
Opp. Mansarovar Garden Near
Sant Nirankari Satsang Bhawan,
Delhi-110 015

Phone : 011-42375520

Bengaluru

13-B, Ground Floor,
Gem Plaza, Infantry Road,
Bengaluru-560 001.

Phone : 080-42017203

Jayna Branch Office

Mumbai

15, Koteshwar Palace,
Jiwa Mahale Marg,
Opp. Garware Andheri (East),
Mumbai-400 069.

Phone : 022-26846585

PRINTED IN APRIL, 2021*

Corporate Office

Jain Brothers Sanitation Pvt. Ltd.

12-SSI, Industrial Estate, G.T. Karnal Road
Delhi-110033 India

Tel : +91 11 47020864, 47087668

E-mail : info@jaynasinks.com
www.jaynasinks.com

Jayna®

The Kitchen Essentials

Note : This Price List is effective from 01-04-2021 & applicable all over India. All sizes are approximate.
Company reserves the right to alter prices, models & specifications without any prior notice.